Pioneer sound.vision.soul

Service Manual

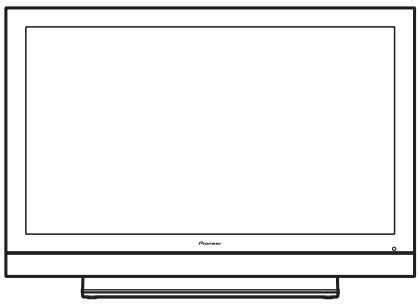

PDP-5020FD

ORDER NO.
ARP3476

FLAT PANEL TV

PDP-5020FD

THIS MANUAL IS APPLICABLE TO THE FOLLOWING MODEL(S) AND TYPE(S).

Model	Type	Power Requirement	Remarks
PDP-5020FD	KUCXC	AC 120 V	

For details, refer to "Important Check Points for good servicing".

PIONEER CORPORATION 4-1, Meguro 1-chome, Meguro-ku, Tokyo 153-8654, Japan
PIONEER ELECTRONICS (USA) INC. P.O. Box 1760, Long Beach, CA 90801-1760, U.S.A.
PIONEER EUROPE NV Haven 1087, Keetberglaan 1, 9120 Melsele, Belgium
PIONEER ELECTRONICS ASIACENTRE PTE. LTD. 253 Alexandra Road, #04-01, Singapore 159936
ⓒ**PIONEER CORPORATION 2008**

T-IZS-001 MAY 2008 Printed in Japan

SAFETY INFORMATION

This service manual is intended for qualified service technicians ; it is not meant for the casual do-it-yourselfer. Qualified technicians have the necessary test equipment and tools, and have been trained to properly and safely repair complex products such as those covered by this manual.
Improperly performed repairs can adversely affect the safety and reliability of the product and may void the warranty. If you are not qualified to perform the repair of this product properly and safely, you should not risk trying to do so and refer the repair to a qualified service technician.

WARNING
This product contains lead in solder and certain electrical parts contain chemicals which are known to the state of California to cause cancer, birth defects or other reproductive harm.

Health & Safety Code Section 25249.6 - Proposition 65

NOTICE
(FOR CANADIAN MODEL ONLY)
Fuse symbols (fast operating fuse) and/or (slow operating fuse) on PCB indicate that replacement parts must be of identical designation.

REMARQUE
(POUR MODÈLE CANADIEN SEULEMENT)
Les symboles de fusible (fusible de type rapide) et/ou (fusible de type lent) sur CCI indiquent que les pièces de remplacement doivent avoir la même désignation.

SAFETY PRECAUTIONS

NOTICE : Comply with all cautions and safety related notes located on or inside the cabinet and on the chassis.

The following precautions should be observed :

1. When service is required, even though the PDP UNIT an isolation transformer should be inserted between the power line and the set in safety before any service is performed.
2. When replacing a chassis in the set, all the protective devices must be put back in place, such as barriers, nonmetallic knobs, adjustment and compartment covershields, isolation resistor-capacitor, etc.
3. When service is required, observe the original lead dress. Extra precaution should be taken to assure correct lead dress in the high voltage circuitry area.
4. Always use the manufacture's replacement components. Especially critical components as indicated on the circuit diagram should not be replaced by other manufacture's. Furthermore where a short circuit has occurred, replace those components that indicate evidence of overheating.
5. Before returning a serviced set to the customer, the service technician must thoroughly test the unit to be certain that it is completely safe to operate without danger of electrical shock, and be sure that no protective device built into the set by the manufacture has become defective, or inadvertently defeated during servicing. Therefore, the following checks should be performed for the continued protection of the customer and servicetechnician.
6. Perform the following precautions against unwanted radiation and rise in internal temperature.
   - Always return the internal wiring to the original styling.
   - Attach parts (Gascket, Ferrite Core, Ground, Rear Cover, Shield Case etc.) surely after disassembly.
7. Perform the following precautions for the PDP panel.
   - When the front case is removed, make sure nothing hits the panel face, panel corner, and panel edge (so that the glass does not break).
   - Make sure that the panel vent does not break. (Check that the cover is attached.)
   - Handle the FPC connected to the panel carefully. Twisting or pulling the FPC when connecting it to the connector will cause it to peel off from the panel.
8. Pay attention to the following.
   - Pay extreme caution when the front case and rear panel are removed because this may cause a high risk of disturbance to TVs and radios in the surrounding.

Leakage Current Cold Check

With the AC plug removed from an AC power source, place a jumper across the two plug prongs. Turn the AC power switch on. Using an insulation tester (DC 500V), connect one lead to the jumpered AC plug and touch the other lead to each exposed metal part (input/output terminals, screwheads, metal overlays, control shafts, etc.), particularly any exposed metal part having a return path to the chassis. Exposed metal parts having a return path to the chassis should have a minimum resistor reading of 4 MΩ.
The below 4 MΩ resistor value indicate an abnormality which require corrective action. Exposed metal parts not having a return path to the chassis will indicate an open circuit.

Leakage Current Hot Check

Plug the AC line cord directly into an AC power source (do not use an isolation transformer for this check).
Turn the AC power switch on.
Using a "Leakage Current Tester (Simpson Model 229 equivalent)", measure for current from all exposed metal parts of the cabinet (input/output terminals, screwheads, metal overlays, control shaft, etc.), particularly any exposed metal part having a return path to the chassis, to a known earth ground (water pipe, conduit, etc.). Any current measured must not exceed 1 mA.

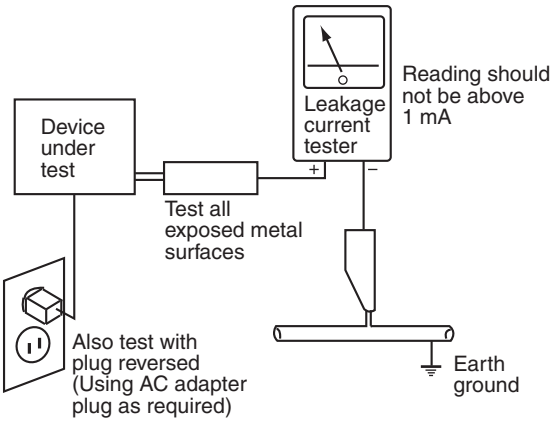

AC Leakage Test

ANY MEASUREMENTS NOT WITHIN THE LIMITS OUTLINED ABOVE ARE INDICATIVE OF A POTENTIAL SHOCK HAZARD AND MUST BE CORRECTED BEFORE RETURNING THE SET TO THE CUSTOMER.

PRODUCT SAFETY NOTICE

Many electrical and mechanical parts in PIONEER set have special safety related characteristics. These are often not evident from visual inspection nor the protection afforded by them necessarily can be obtained by using replacement components rated for higher voltage, wattage, etc. Replacement parts which have these special safety characteristics are identified in this Service Manual.
Electrical components having such features are identified by marking with a ⚠ on the schematics and on the parts list in this Service Manual.
The use of a substitute replacement component which dose not have the same safety characteristics as the PIONEER recommended replacement one, shown in the parts list in this Service Manual, may create shock, fire or other hazards.
Product Safety is continuously under review and new instructions are issued from time to time. For the latest information, always consult the current PIONEER Service Manual. A subscription to, or additional copies of, PIONEER Service Manual may be obtained at a nominal charge from PIONEER.

[Important Check Points for Good Servicing]

In this manual, procedures that must be performed during repairs are marked with the below symbol.
Please be sure to confirm and follow these procedures.

1. Product safety

Please conform to product regulations (such as safety and radiation regulations), and maintain a safe servicing environment by following the safety instructions described in this manual.

① Use specified parts for repair.

Use genuine parts. Be sure to use important parts for safety.

② Do not perform modifications without proper instructions.

Please follow the specified safety methods when modification(addition/change of parts) is required due to interferences such as radio/TV interference and foreign noise.

③ Make sure the soldering of repaired locations is properly performed.

When you solder while repairing, please be sure that there are no cold solder and other debris.
Soldering should be finished with the proper quantity. (Refer to the example)

④ Make sure the screws are tightly fastened.

Please be sure that all screws are fastened, and that there are no loose screws.

⑤ Make sure each connectors are correctly inserted.

Please be sure that all connectors are inserted, and that there are no imperfect insertion.

⑥ Make sure the wiring cables are set to their original state.

Please replace the wiring and cables to the original state after repairs.
In addition, be sure that there are no pinched wires, etc.

⑦ Make sure screws and soldering scraps do not remain inside the product.

Please check that neither solder debris nor screws remain inside the product.

⑧ There should be no semi-broken wires, scratches, melting, etc. on the coating of the power cord.

Damaged power cords may lead to fire accidents, so please be sure that there are no damages.
If you find a damaged power cord, please exchange it with a suitable one.

⑨ There should be no spark traces or similar marks on the power plug.

When spark traces or similar marks are found on the power supply plug, please check the connection and advise on secure connections and suitable usage. Please exchange the power cord if necessary.

⑩ Safe environment should be secured during servicing.

When you perform repairs, please pay attention to static electricity, furniture, household articles, etc. in order to prevent injuries.
Please pay attention to your surroundings and repair safely.

2. Adjustments

To keep the original performance of the products, optimum adjustments and confirmation of characteristics within specification.
Adjustments should be performed in accordance with the procedures/instructions described in this manual.

3. Lubricants, Glues, and Replacement parts

Use grease and adhesives that are equal to the specified substance.
Make sure the proper amount is applied.

4. Cleaning

For parts that require cleaning, such as optical pickups, tape deck heads, lenses and mirrors used in projection monitors, proper cleaning should be performed to restore their performances.

5. Shipping mode and Shipping screws

To protect products from damages or failures during transit, the shipping mode should be set or the shipping screws should be installed before shipment. Please be sure to follow this method especially if it is specified in this manual.

CONTENTS

SAFETY INFORMATION 2
1. SERVICE PRECAUTIONS 6
1.1 NOTES ON SOLDERING 6
1.2 CHARGED SECTION AND HIGH VOLTAGE GENERATING POINT 7
2. SPECIFICATIONS 8
2.1 ACCESSORIES 8
2.2 SPECIFICATIONS 10
2.3 PANEL FACILITIES 12
3. BASIC ITEMS FOR SERVICE 16
3.1 CHECK POINTS AFTER SERVICING 16
3.2 QUICK REFERENCE 17
3.3 PCB LOCATIONS 19
3.4 JIGS LIST 20
4. BLOCK DIAGRAM 22
4.1 OVERALL WIRING DIAGRAM (1/2) 22
4.2 OVERALL WIRING DIAGRAM (2/2) 24
4.3 OVERALL BLOCK DIAGRAM (1/2) 26
4.4 OVERALL BLOCK DIAGRAM (2/2) 28
4.5 POWER SUPPLY UNIT 30
4.6 50F X DRIVE ASSY 32
4.7 50F Y DRIVE, 50F SCAN A and B ASSYS 33
4.8 POWER SUPPLY BLOCK of 50F X, Y DRIVE and 50F SCAN A and B ASSYS 34
4.9 50F ADDRESS L and S ASSYS 35
4.10 50F DIGITAL ASSY 36
4.11 MAIN ASSY (DTV BLOCK DIAGRAM) 37
4.12 POWER SUPPLY BLOCK of MAIN ASSY 38
4.13 IO_AUDIO ASSY 40
4.14 LED and IR ASSYS 42
5. DIAGNOSIS 43
5.1 POWER SUPPLY OPERATION 43
5.2 DIAGNOSIS FLOWCHART OF FAILURE ANALYSIS 49
5.3 DIAGNOSIS OF PD (POWER-DOWN) 72
5.4 DIAGNOSIS OF SD (SHUTDOWN) 76
5.5 NON-FAILURE INFORMATION 80
5.6 OUTLINE OF THE OPERATION 82
5.7 OUTLINE OF RS-232C COMMAND 87
5.8 LIST OF RS-232C COMMANDS 88
5.9 DETAILS OF EACH COMMANDS 97
6. SERVICE FACTORY MODE 111
6.1 OUTLINE OF THE SERVICE FACTORY MODE 111
6.2 DETAILS OF FACTORY MENU 119
6.3 DIGITAL TUNER SERVICE MENU 144
7. DISASSEMBLY 146
7.1 FLOWCHART OF REMOVAL ORDER 146
7.2 DISASSEMBLY 147
7.3 PRECAUTIONS FOR SPEAKER SYSTEM 157
8. EACH SETTING AND ADJUSTMENT 158
8.1 ADJUSTMENT REQUIRED WHEN THE UNIT IS REPAIRED OR REPLACED 158
8.2 BACKUP OF THE EEPROM (DIGITAL ASSY) 161
8.3 HOW TO CLEAR HISTORY DATA 164
8.4 ADJUSTMENT WHEN THE SERVICE PANEL ASSY IS REPLACED 165
8.5 ADJUSTMENT WHEN THE DRIVE ASSYS ARE REPLACED 176
8.6 HOW TO UPDATE USB 179
8.7 ADJUSTMENT WHEN THE MAIN OR IO_AUDIO ASSY IS REPLACED 181
9. EXPLODED VIEWS AND PARTS LIST 182
9.1 PACKING SECTION 182
9.2 REAR SECTION 184
9.3 FRONT SECTION 186
9.4 CHASSIS SECTION (1/2) 188
9.5 CHASSIS SECTION (2/2) 190
9.6 PANEL CHASSIS SECTION 192
9.7 MULTIBASE SECTION 194
9.8 PDP SERVICE ASSY 196
9.9 TABLE TOP STAND 198
9.10 SPEAKER SYSTEM (PACKING) 199
9.11 SPEAKER SYSTEM 200

1. SERVICE PRECAUTIONS
1.1 NOTES ON SOLDERING

- For environmental protection, lead-free solder is used on the printed circuit boards mounted in this unit.
  Be sure to use lead-free solder and a soldering iron that can meet specifications for use with lead-free solders for repairs accompanied by reworking of soldering.

- Compared with conventional eutectic solders, lead-free solders have higher melting points, by approximately 40 ºC.
  Therefore, for lead-free soldering, the tip temperature of a soldering iron must be set to around 373 ºC in general, although the temperature depends on the heat capacity of the PC board on which reworking is required and the weight of the tip of the soldering iron.

Do NOT use a soldering iron whose tip temperature cannot be controlled.

Compared with eutectic solders, lead-free solders have higher bond strengths but slower wetting times and higher melting temperatures (hard to melt/easy to harden).

The following lead-free solders are available as service parts:
- Parts numbers of lead-free solder:
  GYP1006 1.0 in dia.
  GYP1007 0.6 in dia.
  GYP1008 0.3 in dia.

1.2 CHARGED SECTION AND HIGH VOLTAGE GENERATING POINT

■ Charged Section

The places where the commercial AC power is used without passing through the power supply transformer.
If the places are touched, there is a risk of electric shock. In addition, the measuring equipment can be damaged if it is connected to the GND of the charged section and the GND of the non-charged section while connecting the set directly to the commercial AC power supply. Therefore, be sure to connect the set via an insulated transformer and supply the current.

1. Power Cord
2. AC Inlet
3. Power Switch
4. Fuse (In the POWER SUPPLY Unit)
5. STB Transformer and Converter Transformer (In the POWER SUPPLY Unit)
6. Other primary side of the POWER SUPPLY Unit

■ High Voltage Generating Point

The places where voltage is 100 V or more except for the charged places described above. If the places are touched, there is a risk of electric shock.
The VSUS voltage remains for several minutes after the power to the unit is turned off. These places must not be touched until about 10 minutes after the power is turned off, or it is confirmed with a tester that there is no residual VSUS voltage.

If the procedures described in "5.6 [1] PANEL DRIVE-POWER ON/OFF FUNCTION" are performed before the power is turned off, the voltage will be discharged in about 30 seconds.

50F X DRIVE Assy ..... (205 V)
50F Y DRIVE Assy ..... (–280 V to 420 V)
50F SCAN A Assy ..... (–280 V to 420 V)
50F SCAN B Assy ..... (–280 V to 420 V)

: Part is Charged Section.

: Part is the High Voltage Generating Points other than the Charged Section.

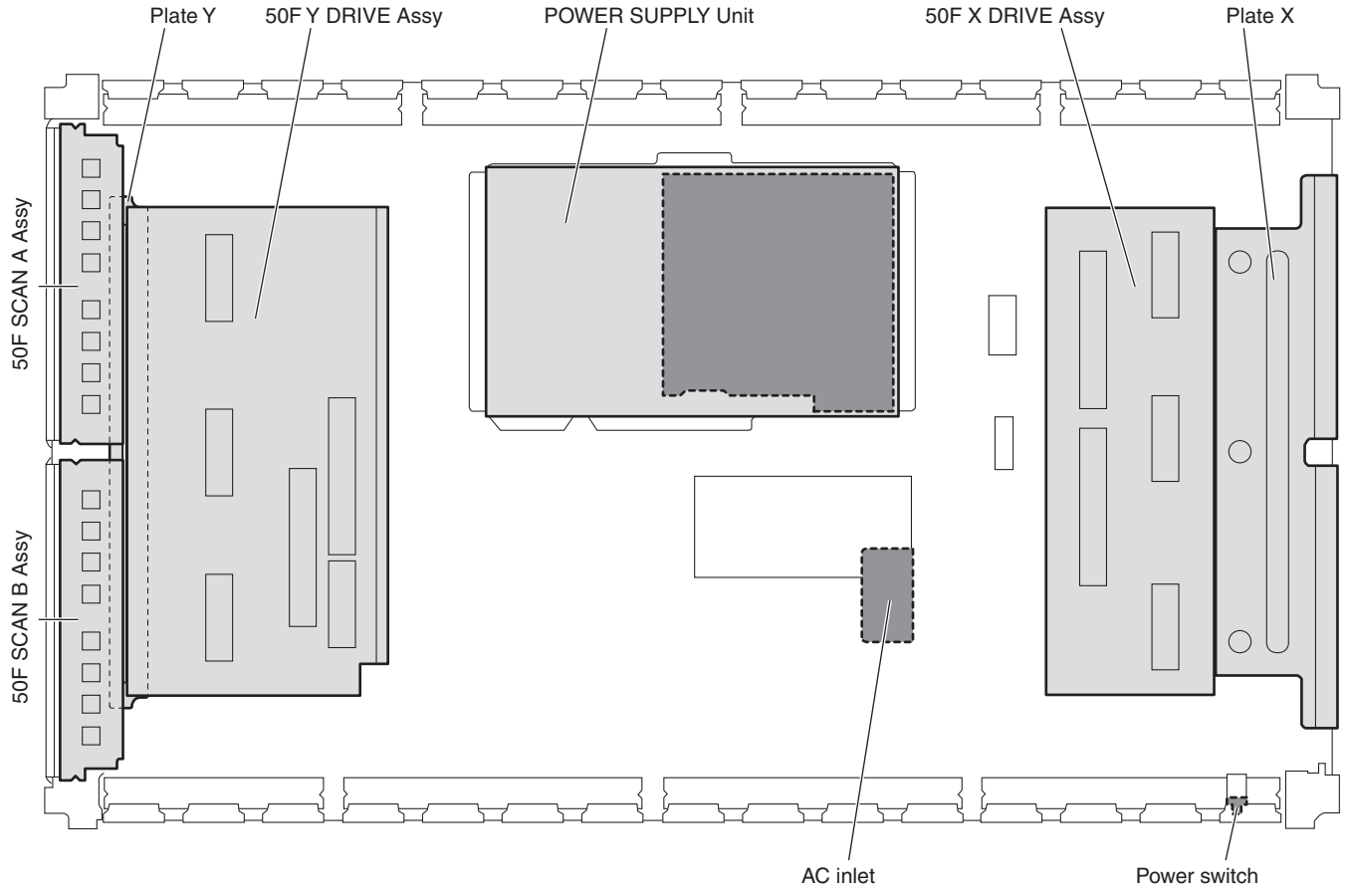

Fig. High Voltage Generating Point (Rear view)

2. SPECIFICATIONS
2.1 ACCESSORIES

- Remote control (AXD1561)

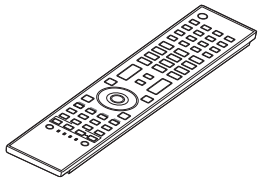

- Power cord (2 m/6.6 feet) (ADG1215)

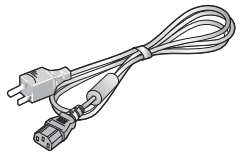

- Alkaline dry cell battery (LR6, AA) (2)

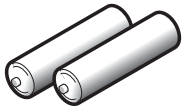

- Binder Assy (AEC2158)
  - Cable clamps (4)

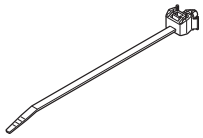

- Fall Prevention Steel Assy (AXY1218)
  - Screws to Metal Fittings (2) (M4×35 mm)

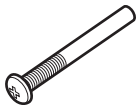

  - Falling Prevention Metal Fittings (2)

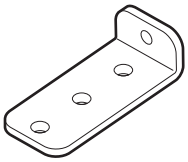

- Cleaning cloth (AED1285)

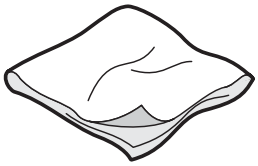

- Warranty card

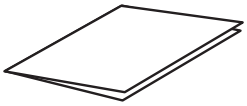

- Operating instructions (ARE1488)

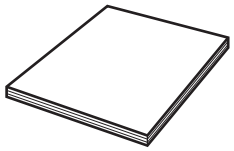

Speaker accessories

- Speaker cables (2)
  (SDS1202)

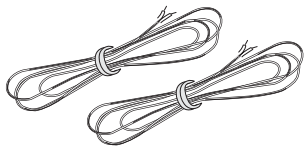

- Speaker

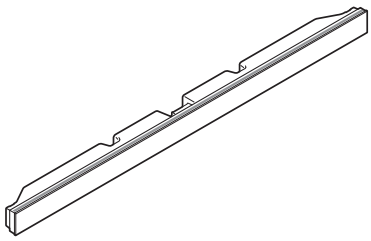

- Speaker Brackets (Side) (2)
  (SXG1158)

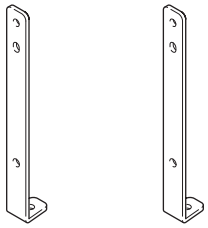

- Speaker Mounting Screws (9)
  (M5 × 10 mm)
  (SBA1292)

- Speaker Bracket (Center)
  (SXG1159)

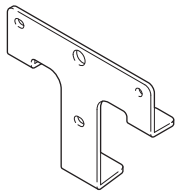

2.2 SPECIFICATIONS

Flat Panel TV	PDP-5020FD (50”)
Number of pixels	1920 × 1080 pixels
Audio Amplifier	18 W + 18 W (1 kHz, 10 %, 6 Ω)
Speaker	Woofer: 4.8 cm x 13 cm cone type Tweeter: 2.5 cm semidome type
Sound Effect	SRS FOCUS/SRS/SRS TruBass/ SRS Definition
On-Screen Languages	English, French, Spanish
Power Requirement	120 V AC, 60 Hz, 436 W (0.2 W Standby)
Weight	Main unit: 33.6 kg (74.1 lbs) Stand: 2.2 kg (4.9 lbs)(including bolts) Speaker: 3.2 kg (7.1 lbs) (including cables, mounting fittings and screws) Total: 39 kg (86 lbs)

Reception System		
Digital		ATSC Digital TV system
	Circuit Type	8VSB/64QAM/256QAM
	Tuner VHF/UHF	VHF Ch. 2 to 13 UHF Ch. 14 to 69
	Tuner CATV	Ch. 2 to 135
	Audio format	Dolby Digital
Analog		American TV standard NTSC system
	Circuit Type	Video signal detection PLL full synchronous detection, PLL digital Synthesizer system
	Tuner VHF/UHF	VHF Ch. 2 to 13 UHF Ch. 14 to 69
	Tuner CATV	Cable Ch. 1 to 135
	Audio multiplex	BTSC system

Terminals - Side		
	INPUT 3	VIDEO in, AUDIO in
	INPUT 7	HDMI in*
	PHONES	16 Ω to 32 Ω recommended
	USB	USB in**

Terminals - Rear		
	ANT	75 Ω UNBAL, F Type for DTV/VHF/UHF/CATV in
	INPUT 1	S-VIDEO in, VIDEO in, AUDIO in
	INPUT 2	COMPONENT VIDEO in, VIDEO in, AUDIO in
	INPUT 4	HDMI in*, AUDIO in
	PC INPUT	Analog RGB in, AUDIO in
	INPUT 5	HDMI in*, AUDIO in
	INPUT 6	HDMI in*
	AUDIO OUT	AUDIO out (Fixed)
	DIGITAL OUT	Optical
	ETHERNET	1
	CONTROL OUT	1
	SPEAKERS	6 Ω to 16 Ω
	SUB WOOFER OUT	Variable

* conforms to HDMI1.3 (Deep Color) and HDCP1.1

** conforms to USB 1.1 and 2.0

HDMI (High-Definition Multimedia Interface) is a digital interface that handles both video and audio using a single cable.

HDCP (High-bandwidth Digital Content Protection) is a technology used to protect copyrighted digital contents that use the Digital Visual Interface (DVI).

Note: Design and specifications are subject to change without notice

Dimensions

PDP-5020FD (50" panel)

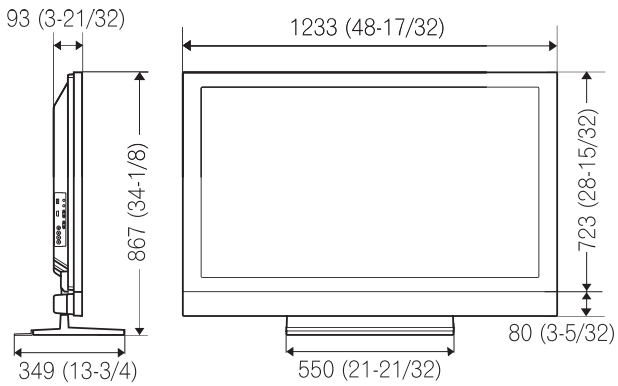

2.3 PANEL FACILITIES

■ Front Section

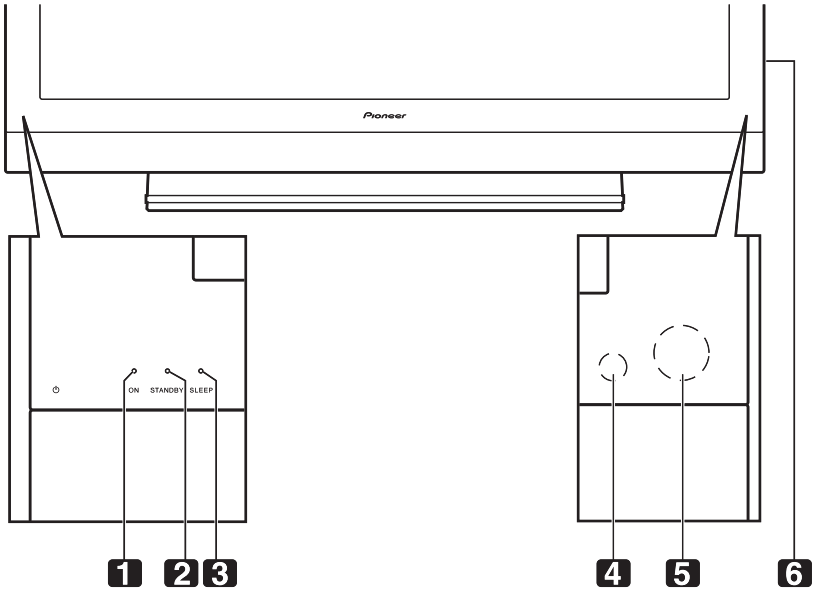

1 -Power ON indicator
2 -STANDBY indicator
3 -SLEEP indicator
4 -Room Light sensor
5 -Remote Control sensor
6 -Bezel (some call it the front frame)

Command Side of the Panel (left side)

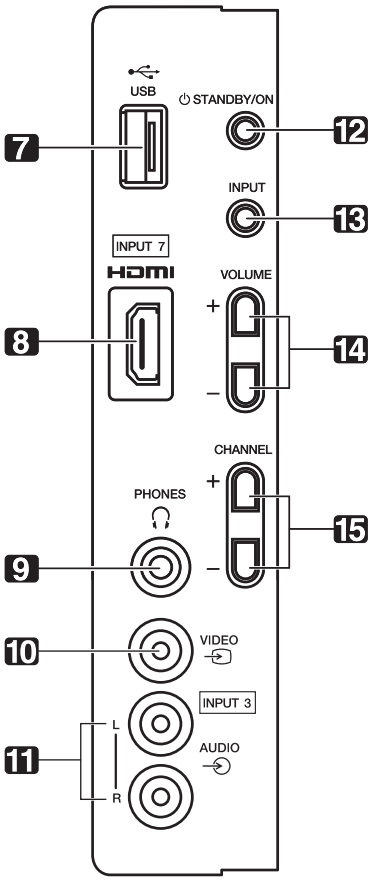

7 -USB terminal
8 -INPUT 7 terminal (HDMI)
9 -PHONES terminal
10 -INPUT 3 terminal (Video)
11 -INPUT 3 terminals (Audio)
12 -STANDBY/ON button
13 -INPUT button
14 -VOLUME Up/Down buttons
15 -CHANNEL Up/Down buttons

■ Rear Section

1 -ANT terminal
2 -PC Input terminal (Analog RGB)
3 -AC In terminal
(upper bank)

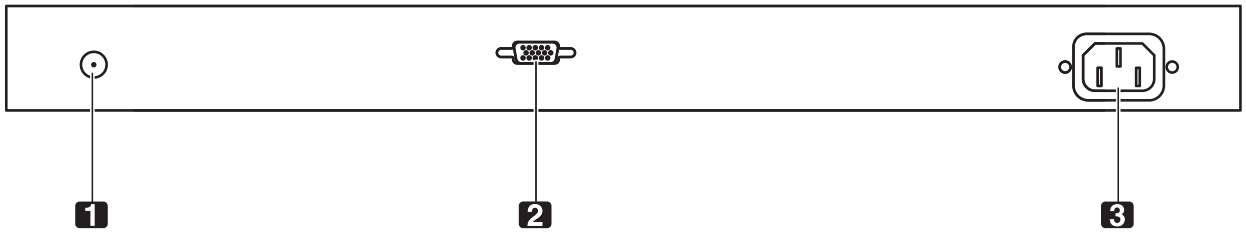

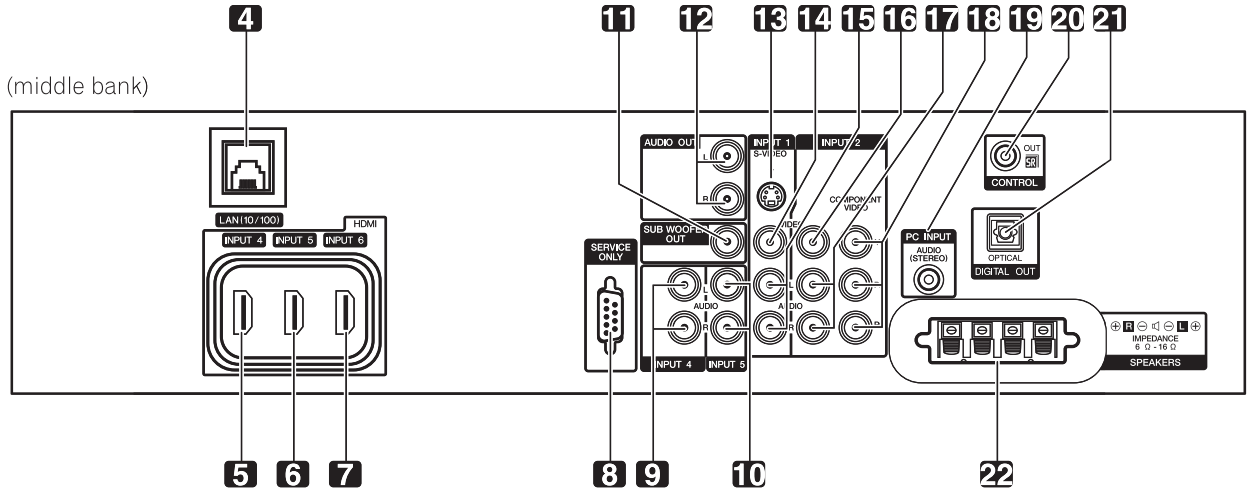

(middle bank)

(from left to right, top to bottom)

4 -Ethernet cable port
5 -INPUT 4 terminal (HDMI)
6 -INPUT 5 terminal (HDMI)
7 -INPUT 6 terminal (HDMI)
8 -RC-232C terminal (for factory use)
9 -INPUT 4 terminal (Audio)
10 -INPUT 5 terminal (Audio)
11 -SUBWOOFER OUT terminal
12 -AUDIO OUT terminals (Audio)
13 -INPUT 1 terminal (S-Video)
14 -INPUT 1 terminal (Video)
15 -INPUT 1 terminals (Audio)
16 -INPUT 2 terminal (Video)
17 -INPUT 2 terminals (Audio)
18 -INPUT 2 terminals (Component, Y, P_B, P_R)
19 -PC INPUT terminal (Audio)
20 -CONTROL OUT terminal
21 -DIGITAL OUT terminal (Optical)
22 -SPEAKERS (right/left) terminal

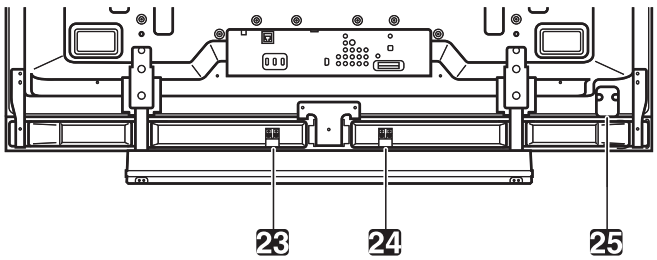

(PDP-6020FD)

(lower bank)

23 -Speakers (R) terminal (speaker side)
24 -Speakers (L) terminal (speaker side)
25 -**Power On button**

Terminals on side and rear panels are common to both 20FD models.

Remote Control Unit

TV ⏻: 1
Turn On or place panel in Standby

INPUT: 2
Select a source (INPUT 1 thru INPUT 7)

PC: 3
Select the PC terminal as an input source

AV SELECTION: 4
Select audio/video settings
AV Source: OPTIMUM, STANDARD, DYNAMIC, MOVIE, GAME, SPORT, USER
PC Source: STANDARD, USER

SPLIT: 5
Cycle view thru single-screen, 2-screen, picture-in-picture

FREEZE: 6
Freeze a frame from a moving image then press again to cancel the freeze function

Number buttons 0 thru 9: 7
Select a channel

•(dot): 8
Enter a dot for selecting a sub-channel

VOL +/–: 9
Set the volume

EXIT: 10
Exit the menu to return to the normal screen

Arrow buttons: 11
Navigate the menu screens

HOME MENU: 12
Display the HOME MENU

Color buttons (Red, Green, Blue, Yellow): 13
Control a BD player for HDMI Control functions only

HDMI CONTROL: 14
Select the HDMI Control functions

SELECT: 15
Select for TV/RCV, CBL/SAT, VCR, or DVD/DVR

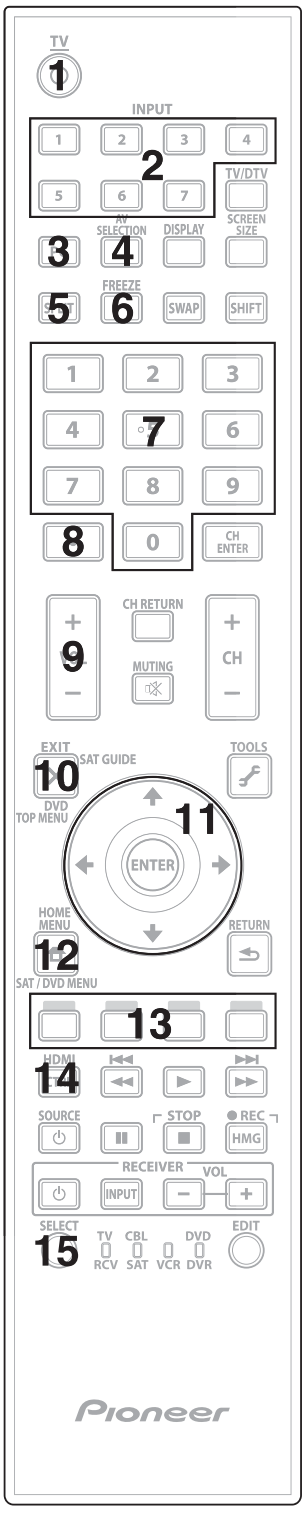

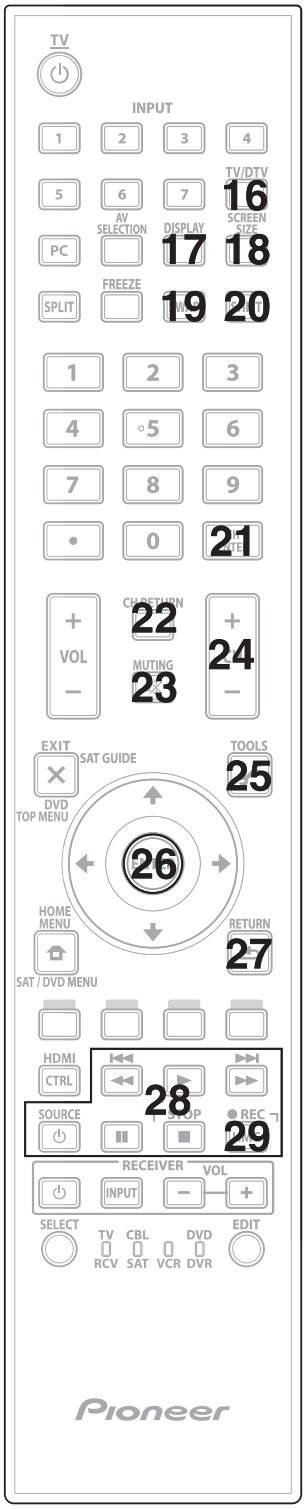

16 **TV/DTV:**
Select analog or digital TV channels

17 **DISPLAY:**
Display the channel information

18 **SCREEN SIZE:**
Select the screen size

19 **SWAP:**
Switch between the two screens when viewing as 2-screen or picture-in-picture

20 **SHIFT:**
Move the location of the small screen when viewing as picture-in-picture

21 **CH ENTER:**
Change the channel

22 **CH RETURN:**
Return to the previous channel

23 **MUTING:**
Turn off the sound while the video continues to play

24 **CH +/–:**
Cycle through channels

25 **TOOLS:**
Display the TOOLS Menu

26 **ENTER:**
Execute a command

27 **RETURN:**
Return to the previous menu screen

28 **Player/Recorder Control:**
Use buttons for control of connected equipment

29 **HMG (Home Media Gallery):**
Display the Home Media Gallery menu
Use this button to start recording (for VCR/DVD recorder only)

3. BASIC ITEMS FOR SERVICE
3.1 CHECK POINTS AFTER SERVICING

Items to be checked after repair (PDP)

To ensure the quality of the product after repair, check the recommended items shown below:

No.	Procedures	Item to be checked
1	Check if all the symptoms pointed out by the customer have been addressed.	The symptoms in question must not be reproduced.
2	Connect the peripheral equipment.	Connect all external peripheral equipment as originally connected and check if the connections are correct.
3	Check the video and audio.	Tune in to the stations that the customer would normally receive and check if video and audio are normal.
4	Check the buttons and controls.	Use the buttons and controls on the remote control unit and main unit and check if they operate properly.
5	Check the cabinet.	Check for any scratches or dirt that have been made or attached on the cabinet after receiving the product for repair.

See the table below for the items to be checked regarding video and audio:

Item to be checked regarding video	Item to be checked regarding audio
Block noise	Distortion
Horizontal noise	Noise
Dot noise	Volume too low
Disturbed image (video jumpiness)	Volume too high
Too dark	Volume fluctuating
Too bright	Sound interrupted
Mottled color	

Cleaning

Name	Part No.	Remarks
Cleaning paper	GED-008	Used to fan cleaning. Refer to “9.4 CHASSIS SECTION (1/2)”.

3.2 QUICK REFERENCE

Quick Reference upon Service Visit ①
Notes, PD/SD diagnosis, and methods for various settings

Notes when visiting for service

1. Notes when disassembling/reassembling

① **Rear case**
When reassembling the rear case, the screws must be tightened in a specific order. Be careful not to tighten them in the wrong order forcibly. For details, see "Rear Case" in "7. DISASSEMBLY".

② **Attaching screws for the HDMI connector**
When attaching the HDMI connector after replacing the Main Assy, secure the HDMI connector manually with a screwdriver, but not with an electric screwdriver. If you tighten the screws too tightly with an electric screwdriver, the screw heads may be damaged, in which case the screws cannot be untightened/tightened any more.

2. On parts replacement

① **How to discharge before replacing the Assys**
A charge of significant voltage remains in the Plasma Panel even after the power is turned off. Safely discharge the panel before replacement of parts, in either manner indicated below:
A: Let the panel sit at least for 3 minutes after the power is turned off.
B: Turn the Large Signal System off before the power is turned off then, after 1 minute, turn the power off.
For details, see "5.6 [1] PANEL DRIVE-POWER ON/OFF FUNCTION".

② **On the settings after replacement of the Assys**
Some boards need settings made after replacement of the Assys. For details, see "8. EACH SETTING AND ADJUSTMENT".

3. On various settings

① **Setting in Factory mode**
After a Mask indication into the panel is performed, be sure to set the Mask setting to "OFF" then exit Factory mode.

PD/SD

Item	No. of LEDs flashing	
	Red	Blue
SQ_LSI		Blue 1
Module device communication		Blue 2
DIGITAL-RST2		Blue 3
Panel temperature		Blue 4
Audio		Blue 5
Module UCOM communication		Blue 6
Main 3-wire serial communication		Blue 7
Main IIC communication		Blue 8
Main UCOM communication		Blue 9
FAN		Blue 10
Unit high temperature		Blue 11
D-TUNER communication		Blue 12
MTB-RST2/RST4		Blue 13
Main EEPROM		Blue 15
POWER	Red 2	
SCAN	Red 3	
SCN-5V	Red 4	
Y-DCDC	Red 6	
Y-SUS	Red 7	
ADRS	Red 8	
X-DCDC	Red 10	
X-SUS	Red 11	
DIG-DCDC	Red 12	
UNKNOWN	Red 15	

Subcategory confirmation procedure

If the DISPLAY key is pressed during shutdown, the orange LED flashes. For indication patterns other than described below, see 5.4 [2].

SD		SD Subcategory
2	1	EEPROM
	2	BACKUP
	3	DAC
4	1	PANEL high temperature
	2	PANEL low temperature
8	1	Tuner 1
	2	MSP/MAP
	3	AV Switch
	4	RGB Switch
	5	Main VDEC
	6	VDEC-SDRAM
	7	AD/PLL
	8	HDMI
	11	US-MSP
13	1	RST2
	2	RST4

LED Display Information

For indication patterns other than described below, see 5.1 [1].

① Rewriting software
② No backup
③ PD (2-15)
④ SD (1-15)

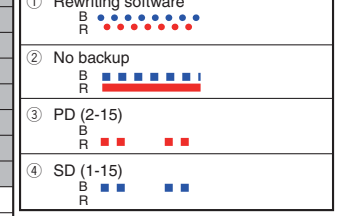

How to locate several items on the Factory menu

{ } : Item on the Factory menu
[ ] : Key on the remote control unit
" " : Screen indication

1. Confirmation of accumulated power-on time and power-on count
Select {INFORMATION} then {HOUR METER}.
(After entering Factory mode, press [⬇] four times.)

2. Confirmation of the Power-down and Shutdown histories

① **Panel system**
PD: Select {PANEL FACTORY} then {POWER DOWN}.
(After entering Factory mode, press [MUTING] once, press [ENTER/SET], then press [⬇] two times.)
SD: Select {PANEL FACTORY} then {SHUT DOWN}.
(After entering Factory mode, press [MUTING] once, press [ENTER/SET], then press [⬇] three times.)

② **MTB section**
Select {INFORMATION} then {MAIN NG}.
(After entering Factory mode, press [⬇] two times.)

3. How to display the Mask indication

① **Mask indication in the panel side**
1. Select {PANEL FACTORY} then {RASTER MASK SETUP}.
(After entering Factory mode, press [MUTING] once, press [ENTER/SET], then press [⬇] 8 times.)
2. Press [ENTER/SET], then select a Mask indication, using [⬆] or [⬇].

Adjustments and Settings after replacement of the Assys (Procedures in Factory mode)

1. Digital Video Assy: Transfer of backup data
① Select {PANEL FACTORY}, {ETC}, then {BACKUP DATA}. (After entering Factory mode, press [MUTING] once, press [ENTER/SET], press [⬇] seven times, then press [ENTER/SET].)
② Select {TRANSFER}, using [➡], then hold [ENTER/SET] pressed for at least 5 seconds.
③ After transfer of backup data is completed, {ETC} is automatically selected, and the LED on the front panel returns to normal lighting.

2. MAIN Assy: Execution of FINAL SETUP.
① Select {INITIALIZE} then {FINAL SETUP}, then press [ENTER/SET]. (After entering Factory mode, press [MUTING] three times, then press [⬇] four times.)
② Select "YES", using [➡]. Then hold [ENTER/SET] pressed for at least 5 seconds.
③ After "FINAL SETUP IS COMPLETE" is displayed on the screen, turn the POWER switch of the main unit off.

3. POWER SUPPLY Unit: Clearance of the accumulated power-on count and maximum temperature value
① Select {PANEL FACTORY}, {ETC}, then {P COUNT INFO}. (After entering Factory mode, press [MUTING] once, press [ENTER/SET], press [⬇] seven times, press [ENTER/SET], then press [⬇] six times.)
② Press [➡] to select "CLEAR". Hold [ENTER/SET] pressed for at least 5 seconds. After clearance is completed, "ETC" is automatically selected. Clear the maximum temperature value (MAX TEMP) in the same manner.

4. Other Assys: Clearance of the maximum temperature value
① Select {PANEL FACTORY}, {ETC}, then {MAX TEMP}. (After entering Factory mode, press [MUTING] once, press [ENTER], press [⬇] seven times, press [ENTER/SET], then press [⬇] seven times.)
② Press [➡] to select "CLEAR". Hold [ENTER/SET] pressed for at least 5 seconds. After clearance is completed, "ETC" is automatically selected.

Quick Reference upon Service Visit ②
Mode transition and structure of layers in Service Factory mode

Mode transition in Service Factory mode

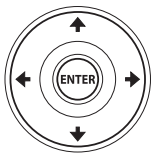

Up

Down

- To shift to another mode, press [MUTING].
- To shift to another item in a specific mode, press [⬆] or [⬇].
- To shift to the next nested layer below for an item with a "(+)" indication, press [ENTER/SET]. To return to the next nested layer above, also press [ENTER/SET].

INFORMATION mode
1. VERSION (1)
2. VERSION (2)
3. MAIN NG
4. TEMPERATURE
5. HOUR METER
6. HDMI SIGNAL INFO 1
7. HDMI SIGNAL INFO 2
8. VDEC SIGNAL INFO 1
9. VDEC SIGNAL INFO 2

MUTING

INITIALIZE mode
1. SIDE MASK LEVEL
2. FINAL SETUP
3. DTB SERVICE MENU
4. Wide XGA AUTO
5. AUTO ADJUSTMENT

MUTING

MUTING

PANEL FACTORY mode
1. PANEL INFORMATION
2. PANEL WORKS
3. POWER DOWN
4. SHUT DOWN
5. PANEL-1 ADJ
6. PANEL-2 ADJ
7. PANEL FUNCTION
8. ETC.
9. RASTER MASK SETUP
10. PATTEN MASK SETUP
11. COMBI MASK SETUP

MUTING

OPTION mode
1. CH PRESET
2. ANTENNA MODE
3. AFT
4. SYNC DET
5. CTI
6. CC

Structure of Layers in Service Factory Mode

INFORMATION mode	
├ 1. VERSION (1)	The software versions for each microcomputer
├ 2. VERSION (2)	The Flash memory versions for each device
├ 3. MAIN NG	The shutdown message ID/event times
│	(Going Clear mode by [ENTER/SET] key)
│ └ 3-1. CLEAR	Select Yes by [➡] key ➡ pushing and hold [ENTER/SET] key
├ 4. TEMPERATURE	The temperature/FAN rotating status/Room Light Sensor
├ 5. HOUR METER	The HOUR METER/P-COUNT information
│ └ 5-1. CLEAR	Select Yes by [➡] key ➡ pushing and hold [ENTER/SET] key
├ 6. HDMI SIGNAL INFO 1	The information of HDMI information files
├ 7. HDMI SIGNAL INFO 2	The information of HDMI information files
├ 8. VDEC SIGNAL INFO 1	The signal information of VDEC
├ 9. VDEC SIGNAL INFO 2	The signal information of VDEC
PANEL FACTORY mode	Refer to [PANEL FACTORY MODE]
OPTION mode	
├ 1. CH PRESET	For production line use
├ 2. ANTENNA MODE	For production line use
├ 3. AFT	For production line use
├ 4. SYNC DET	For technical analysis
├ 5. CTI	For technical analysis
├ 6. CC	For technical analysis
INITIALIZE mode	
├ 1. SIDE MASK LEVEL	For factory use
│ └ 1-1. SIDE MASK LEVEL	
├ 2. FINAL SETUP	Set to Factory default settings (it should perform after
│ └ 2-1. DATA RESET	replacing a MAIN Assy)
├ 3. DTB SERVICE MODE	Information for the Digital Tuner Service Menu is displayed
│ └ 3-1. MODE SHIFT	
├ 4. Wide XGA AUTO	For technical analysis
└ 5. AUTO ADJUSTMENT	

Structure of Layers in Panel Factory Mode 1

1. PANEL INFORMATION	Version indication of the panel
2. PANEL WORKS	Indications of the accumulated power-on time and power-on count of the panel
3. POWER DOWN	Indication of the Power-down history
4. SHUT DOWN	Indication of the Shutdown history
5. PANEL-1 ADJ (+)	
1. VOL SUS	Settings required after replacement of the panel
2. VOL OFFSET	
• • • • •	
10. RESET1ST_KSB	Items for factory use
• • • • •	
25. SUS FREQ	For AM noise prevention (Depending on the mode, brightness of the screen changes.) For confirmation of the result of the setting change, the unit must be turned off then back on again.
6. PANEL-2 ADJ (+)	
1. R-HIGH	For the WB adjustment of the panel and ABL adjustment. A setting table is available for each signal frequency.
2. G-HIGH	
• • • • •	
6. B-LOW	
7. ABL	
7. PANEL FUNCTION (+)	
1. R-LEVEL	Items for factory use
• • • • •	

To "Structure of Layers in Panel Factory Mode 2"

Structure of Layers in Panel Factory Mode 2

8. ETC (+)	
1. BACKUP DATA	For transferring backup data (after replacement of the DIGITAL Assy)
2. DIGITAL EEPROM	Change the adjustment status of the DIGITAL Assy.
3. PD INFO.	For clearance of data for the corresponding items. The clearing method is the same: Select "CLEAR", then hold [ENTER/SET] pressed for at least 5 seconds.
4. SD INFO.	
5. HR-MTR INFO.	
6. PM/B1-B5	
7. P COUNT INFO.	
8. MAX TEMP.	
9. MIRROR	Switch the Mirror display mode.
10. CLS	Switch the function when checking the color sensor level.
9. RASTER MASK SETUP (+)	
1. MASK OFF	For use while the Raster Mask is displayed. Use [⬆] or [⬇] to select the type of mask. Use [➡] or [⬅] to select the sequence.
2. RST MASK 01	
• • • • •	
10. PATTERN MASK SETUP (+)	
1. MASK OFF	For use while the Pattern Mask is displayed. Use [⬆] or [⬇] to select the type of mask. Use [➡] or [⬅] to select the sequence.
2. PTN MASK 01	
• • • • •	
11. COMBI MASK SETUP (+)	
1. MASK OFF	For use while the Combination Mask is displayed. Use [⬆] or [⬇] to select the type of mask. Use [➡] or [⬅] to select the sequence.
2. CMB MASK 01	
• • • • •	

3.3 PCB LOCATIONS

Note: The wiring shown in the photo is different from the actual wiring, because the product in the photo is a prototype. Upon servicing, be sure to restore the original wiring of the unit after repair work.

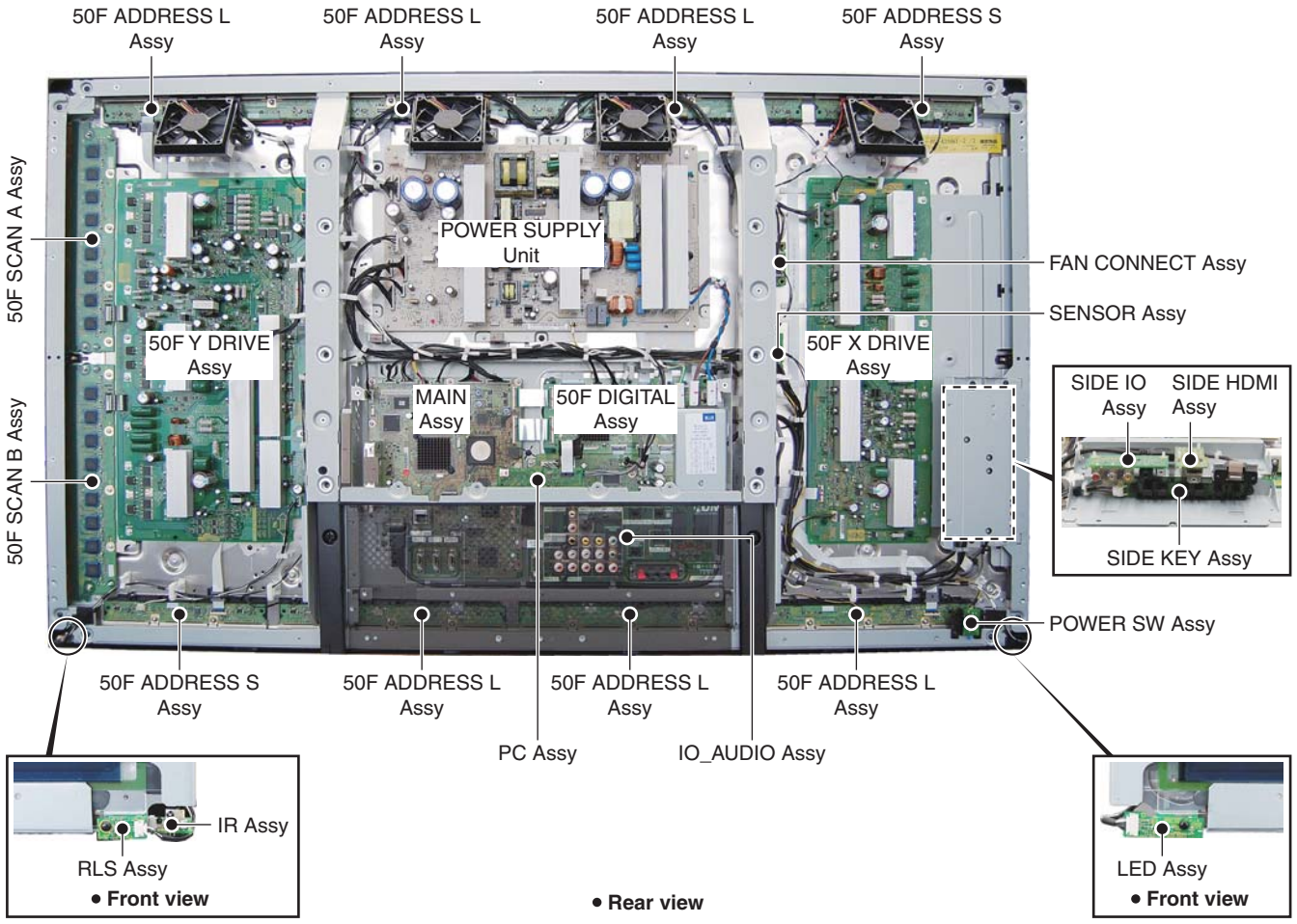

NOTES: ● *Parts marked by "NSP" are generally unavailable because they are not in our Master Spare Parts List.*
● *The ⚠ mark found on some component parts indicates the importance of the safety factor of the part. Therefore, when replacing, be sure to use parts of identical designation.*

LIST OF ASSEMBLIES

Mark	No.	Description	Part No.
NSP		50F ADDRESS L ASSY	AWW1348
NSP		50F ADDRESS S ASSY	AWW1349
NSP		50F SCAN A ASSY	AWW1350
		└ IC2801 - IC2808	AN16184A
NSP		50F SCAN B ASSY	AWW1351
		└ IC2901 - IC2908	AN16184A
		SENSOR ASSY	AWW1340
		50F DIGITAL Assy	AWW1347
		50F X DRIVE ASSY	AWV2546
		50F Y DRIVE ASSY	AWV2547
		MAIN ASSY	AWW1371
		SIDE HDMI ASSY	AWW1372
		IO_AUDIO ASSY	AWW1352
		SIDE IO ASSY	AWW1356
		PC ASSY	AWW1359
		SIDE KEY ASSY	AWW1361
		LED ASSY	AWW1362
		IR ASSY	AWW1363
		FAN CONNECT ASSY	AWW1364
		RLS ASSY	AWW1365
		POWER SW ASSY	AWW1366
⚠		POWER SUPPLY UNIT	AXY1200
		PDP SERVICE ASSY 509F	AWU1339

3.4 JIGS LIST

Name	Jig No.	Remarks
Service Cotton Cloth Glove	GYX1002	7.3 DISASSEMBLY AND REASSEMBLY PRECAUTIONS FOR SPEAKER SYSTEM

A

B

C

D

E

F

4. BLOCK DIAGRAM
4.1 OVERALL WIRING DIAGRAM (1/2)

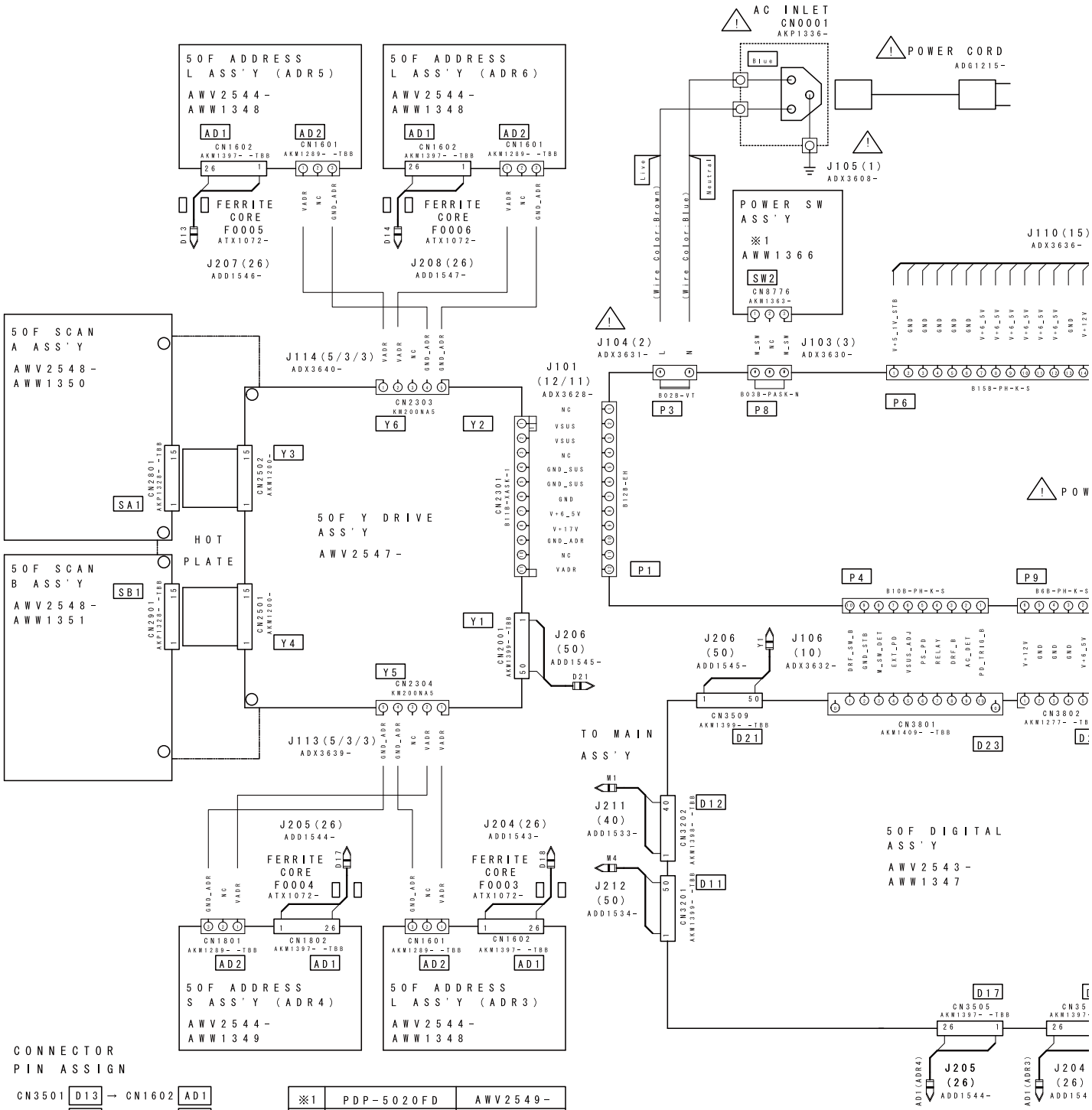

CONNECTOR PIN ASSIGN

CN3501	D13	→ CN1602	AD1
CN3502	D14	→ CN1602	AD1
CN3503	D15	→ CN1602	AD1
CN3504	D16	→ CN1802	AD1
CN3505	D17	→ CN1802	AD1
CN3506	D18	→ CN1602	AD1
CN3507	D19	→ CN1602	AD1
CN3508	D20	→ CN1602	AD1

1→26. V+10V	14→13. CLKN		
2→25. V+10V	15→12. CLKP		
3→24. GND	16→11. GND		
4→23. GND	17→10. DN		
5→22. AN	18→ 9. DP		
6→21. AP	19→ 8. GND		
7→20. GND	20→ 7. GND		
8→19. BN	21→ 6. V+3_3V		
9→18. BP	22→ 5. V+3_3V		
10→17. GND	23→ 4. V+3_3V		
11→16. CN	24→ 3. GND		
12→15. CP	25→ 2. LS1		
13→14. GND	26→ 1. ADR_PD		

※1	PDP-5020FD	AWV2549-

CN2501 Y4 → CN2901 SB1

1. VH	9. CLK_L
2. VH	10. LE
3. NC	11. OC1
4. NC	12. OC2
5. GNDH_VH	13. CLR
6. GNDH_VH	14. GNDH_RL
7. SI	15. IC5V
8. GNDH_DIG	

CN2502 Y3 → CN2801 SA1

1. VH	9. LE
2. VH	10. OC1
3. NC	11. OC2
4. NC	12. CLR
5. GNDH_VH	13. SI
6. GNDH_VH	14. GNDH_RH
7. CLK_H	15. IC5V
8. GNDH_DIG	

CN3509 D21 → CN2001 Y1

1→50. YCN_PD	18→33. SUS_MUTE	35→16. YRSV4
2→49. VYPRST_ADJ	19→32. YSNOFS	36→15. SI
3→48. SCAN_PD	20→31. GND	37→14. CLK_H
4→47. GND	21→30. YRST-D	38→13. GND
5→46. YDD_PD	22→29. YSUS_LMSK	39→12. LE
6→45. VOFS_ADJ	23→28. YSUS_HMSK	40→11. OC1
7→44. YSUS_PD	24→27. GND	41→10. OC2
8→43. GND	25→26. YSUS_D	42→ 9. CLR
9→42. YRSV1	26→25. YPR-U	43→ 8. GND
10→41. YRSV2	27→24. YSUS_G	44→ 7. VKNOFS4_ADJ
11→40. GND	28→23. GND	45→ 6. VKNOFS3_ADJ
12→39. YKNOFS4	29→22. YSUS_U	46→ 5. VKNOFS1_2_ADJ
13→38. YKNOFS3	30→21. YRSV3	47→ 4. GND
14→37. YKNOFS2	31→20. YSUS_B	48→ 3. SCN5V_PD
15→36. YKNOFS1	32→19. ESW	49→ 2. YDRV_PD(GND)
16→35. GND	33→18. GND	50→ 1. PSW2
17→34. YSOFT-G	34→17. CLK_L	

CN3201 D11 → CN4101 M4

1→50. V+3_4V_ACT2	18→33. R8_EVN	35-
2→49. NC	19→32. R7_EVN	36-
3→48. GND	20→31. R6_EVN	37-
4→47. MULTI_OE	21→30. R5_EVN	38-
5→46. RELAY2	22→29. R4_EVN	39-
6→45. REQ_MD	23→28. R3_EVN	40-
7→44. RXD_MD	24→27. R2_EVN	41-
8→43. TXD_MD	25→26. R1_EVN	42-
9→42. GND	26→25. R0_EVN	43-
10→41. THEATER	27→24. GND	44-
11→40. VD	28→23. G9_EVN	45-
12→39. HD	29→22. G8_EVN	46-
13→38. DE	30→21. G7_EVN	47-
14→37. GND	31→20. G6_EVN	48-
15→36. CLK	32→19. G5_EVN	49-
16→35. GND	33→18. G4_EVN	50-
17→34. R9_EVN	34→17. G3_EVN	

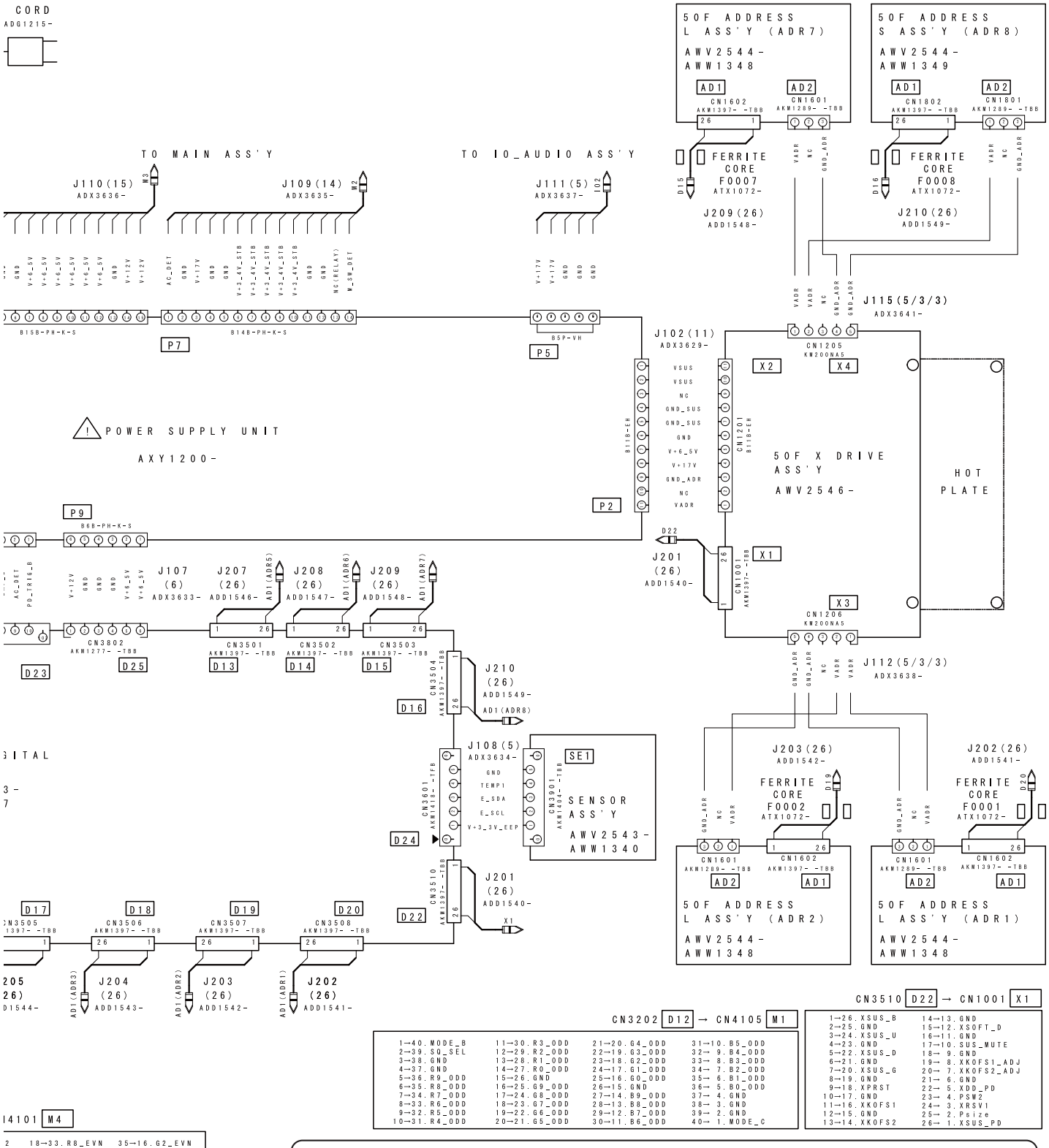

- When ordering service parts, be sure to refer to “EXPLODED VIEWS and PARTS LIST” or “PCB PARTS LIST”.
- The ⚠ mark found on some component parts indicates the importance of the safety factor of the part. Therefore, when replacing, be sure to use parts of identical designation.

OVERALL DIAGRAM
PDP-5020FD

4.2 OVERALL WIRING DIAGRAM (2/2)

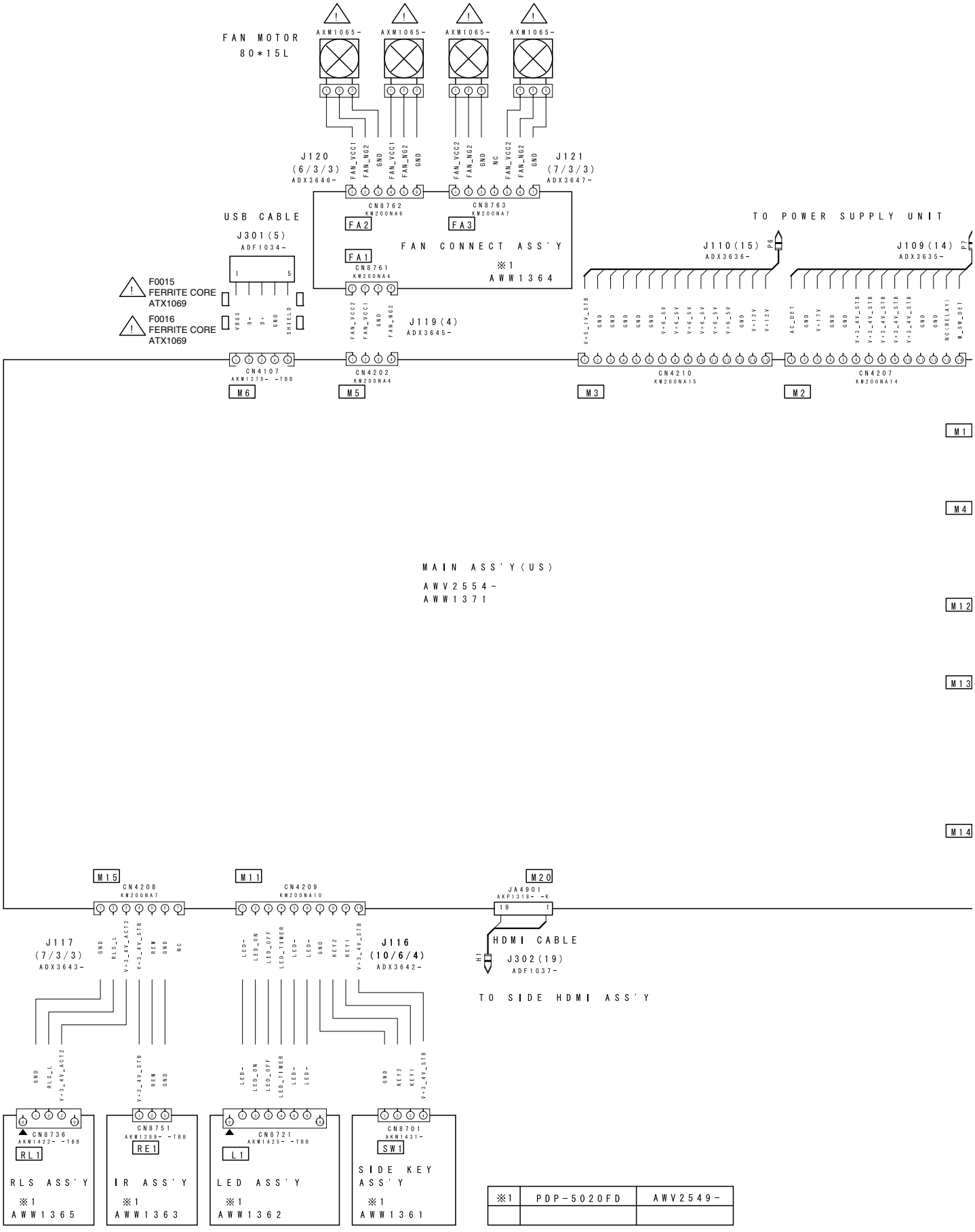

※1	PDP-5020FD	AWV2549-

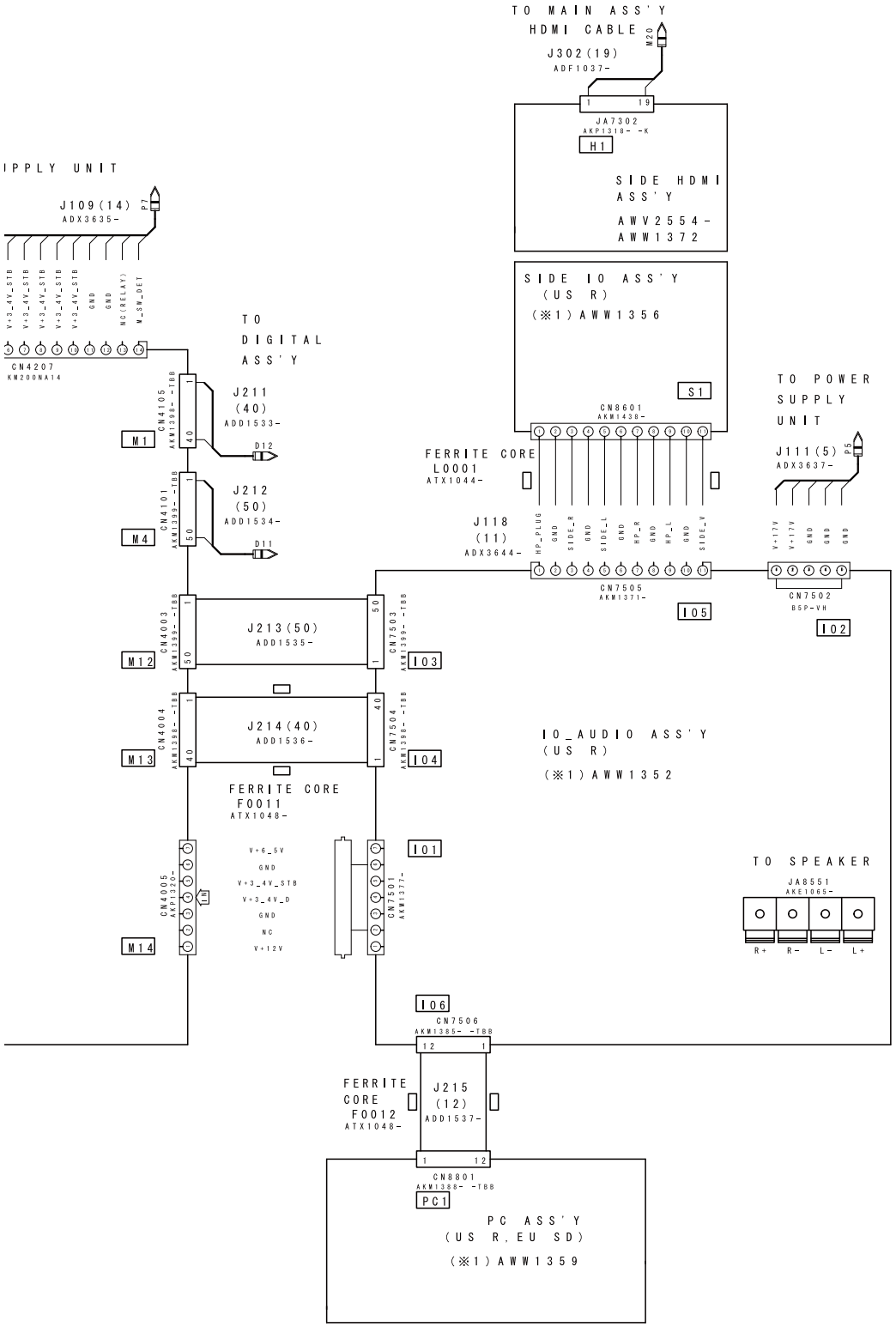

CONNECTOR PIN ASSIGN

CN4003 M12 → CN7503 I03

1→50.GND	26→25.GND
2→49.HP_PLUG	27→24.EMMA_DA_GY
3→48.WP_EDID	28→23.EMMA_DA_BCB
4→47.DSUB_DET	29→22.EMMA_DA_RCR
5→46.AC_HP_MUTE	30→21.GND
6→45.GND	31→20.EXT_HD
7→44.SDA_AV	32→19.EXT_VD
8→43.SCL_AV	33→18.INT_VD
9→42.GND	34→17.INT_HD
10→41.AC_A_MUTE	35→16.NC
11→40.RST_MSP	36→15.CLP_RGB2
12→39.OTW	37→14.GND
13→38.A_NG_B	38→13.SDA_AV5
14→37.GND	39→12.SCL_AV5
15→36.I2S_BCLK_DTV	40→11.GND
16→35.GND	41→10.SR_OUT
17→34.I2S_LRCLK_DTV	42→ 9.NC
18→33.I2S_SDATA_DTV	43→ 8.NC
19→32.GND	44→ 7.GND
20→31.GND	45→ 6.TXD_232C_1
21→30.GND	46→ 5.RXD_232C_1
22→29.SPDIF_HDMI	47→ 4.NC(232C_EN_B)
23→28.GND	48→ 3.232C_DET
24→27.GND	49→ 2.RST4
25→26.SPDIF_DTV	50→ 1.GND(IO_DET)

CN4004 M13 → CN7504 I04

1→40.GND	21→20.GND
2→39.RCR_AD	22→19.SUB_C
3→38.GND	23→18.GND
4→37.BCB_AD	24→17.SUB_Y
5→36.GND	25→16.GND
6→35.GY_AD	26→15.A_TUNER_V
7→34.GND	27→14.GND
8→33.NC	28→13.AIR_L
9→32.GND	29→12.GND
10→31.NC	30→11.AIR_R
11→30.GND	31→10.GND
12→29.NC	32→ 9.AC_AM_MUTE
13→28.GND	33→ 8.TEMP2
14→27.NC	34→ 7.NC
15→26.GND	35→ 6.NC
16→25.NC	36→ 5.NC
17→24.GND	37→ 4.NC
18→23.MAIN_C	38→ 3.MODEL_DET1
19→22.GND	39→ 2.IR_OUT
20→21.MAIN_Y	40→ 1.GND

CN7506 I06 → CN8801 PC1

1→12.V+3_4V_D	7→ 6.PC_B
2→11.PC_HD	8→ 5.GND
3→10.PC_VD	9→ 4.PC_G
4→ 9.GND	10→ 3.WP_EDID
5→ 8.PC_R	11→ 2.V+5V_IO
6→ 7.GND	12→ 1.GND

JA4901 M20 → JA7302 H1

1.D2+	11.GND
2.GND	12.CLK-
3.D2-	13.CEC
4.D1+	14.V+3_4_D4
5.GND	15.SCL
6.D1-	16.SDA
7.D0+	17.WP_EDID
8.GND	18.V+DDC5V_1
9.D0-	19.HDMI_P_SIDE
10.CLK+	

OVERALL DIAGRAM
PDP-5020FD

4.3 OVERALL BLOCK DIAGRAM (1/2)

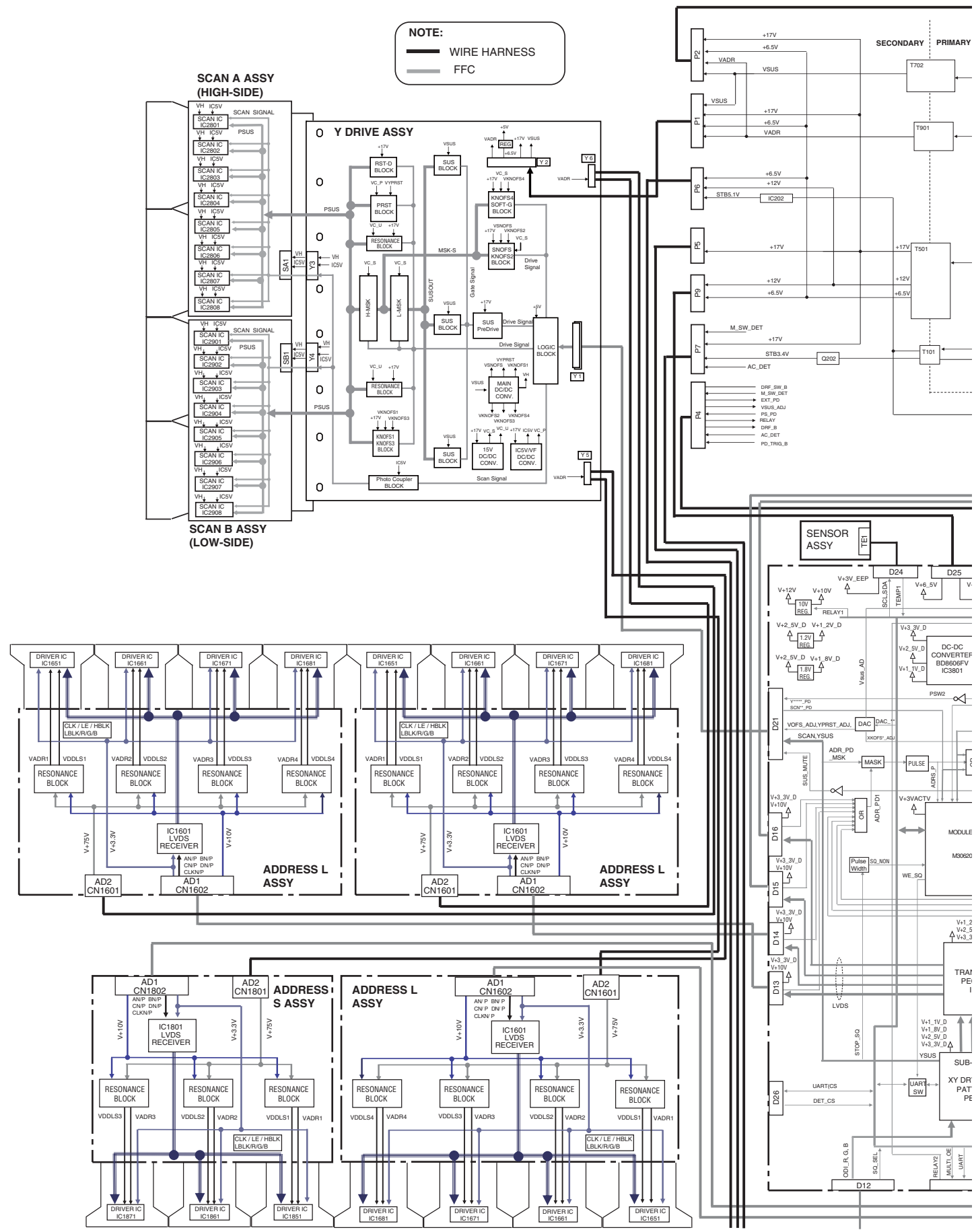

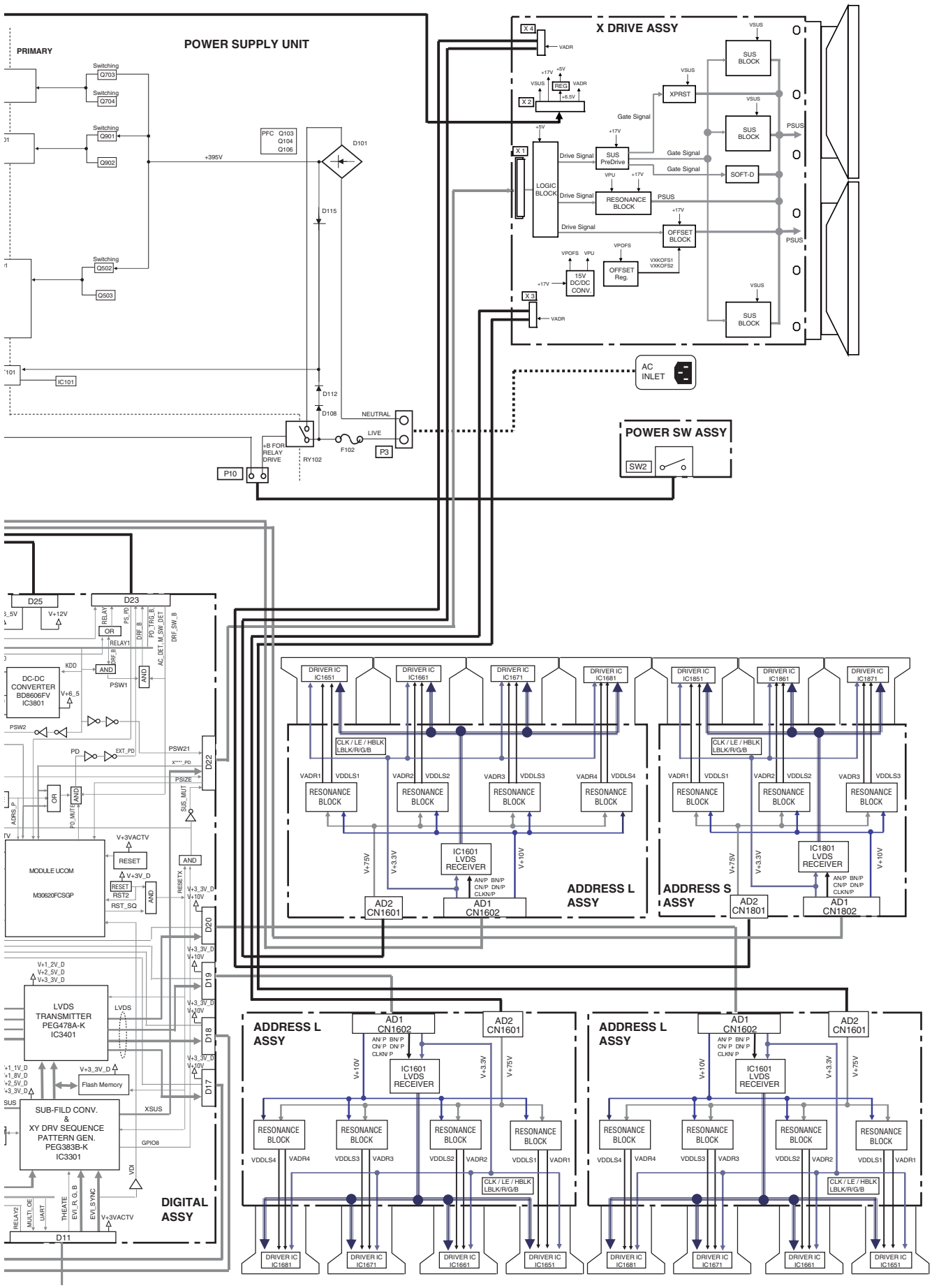
POWER SUPPLY UNIT
PRIMARY
X DRIVE ASSY
SUS BLOCK
XPRST
SUS PreDrive
LOGIC BLOCK
RESONANCE BLOCK
OFFSET BLOCK
OFFSET Reg.
15V DC/DC CONV.
SOFT-D
AC INLET
POWER SW ASSY
SW2
DC-DC CONVERTER BD8606FV IC3801
MODULE UCOM M30620FCSGP
LVDS TRANSMITTER PEG478A-K IC3401
SUB-FILD CONV. & XY DRV SEQUENCE PATTERN GEN. PEG383B-K IC3301
Flash Memory
DIGITAL ASSY
ADDRESS L ASSY
ADDRESS S ASSY
IC1601 LVDS RECEIVER
IC1801 LVDS RECEIVER
RESONANCE BLOCK
DRIVER IC IC1651
DRIVER IC IC1661
DRIVER IC IC1671
DRIVER IC IC1681
DRIVER IC IC1851
DRIVER IC IC1861
DRIVER IC IC1871
AD1 CN1602
AD2 CN1601
AD2 CN1801
AD1 CN1802

4.4 OVERALL BLOCK DIAGRAM (2/2)

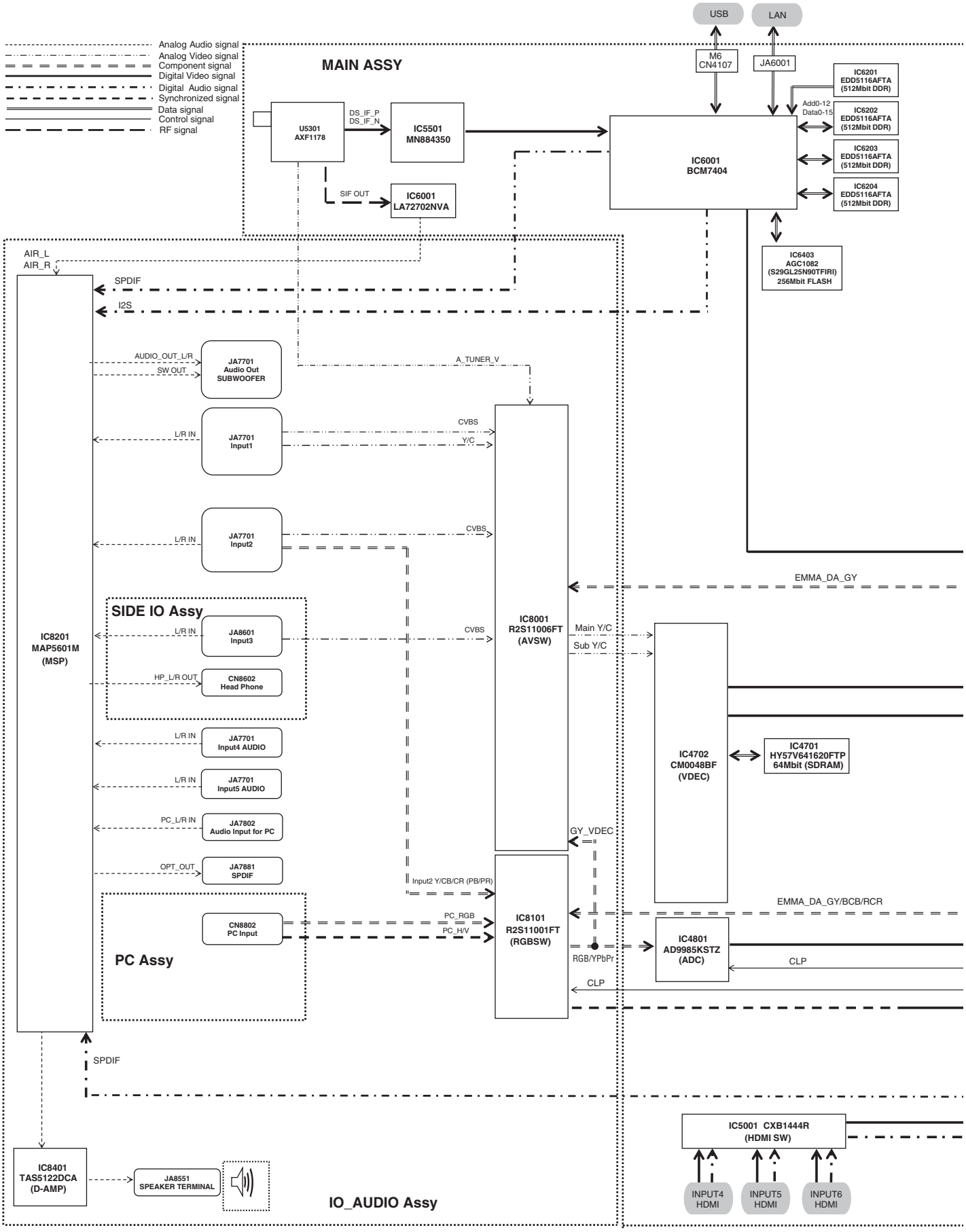

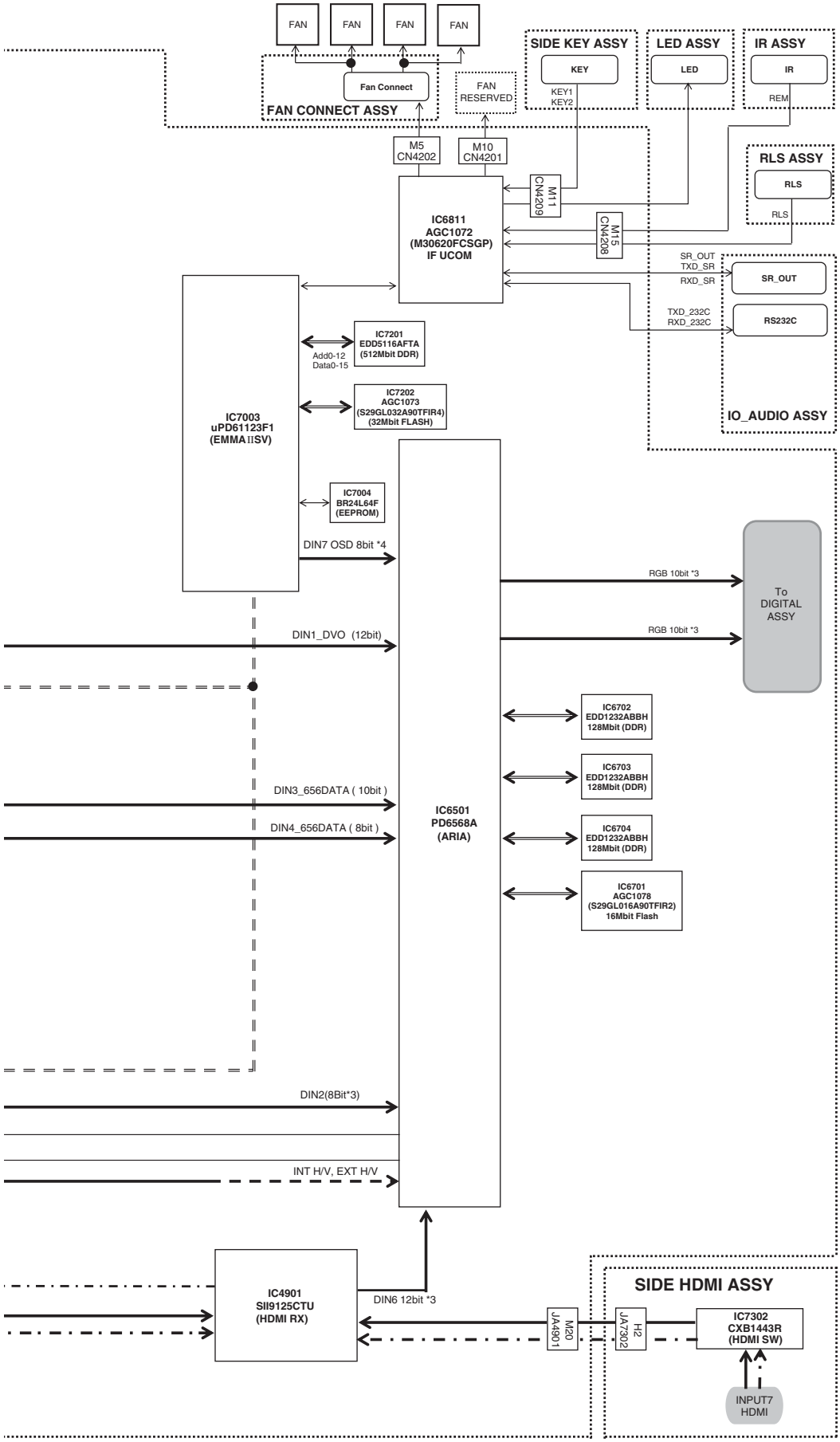
FAN
FAN
FAN
FAN
Fan Connect
FAN CONNECT ASSY
FAN RESERVED
SIDE KEY ASSY
KEY
KEY1
KEY2
LED ASSY
LED
IR ASSY
IR
REM
M5 CN4202
M10 CN4201
M11 CN4209
M15 CN4208
RLS ASSY
RLS
RLS
IC6811 AGC1072 (M30620FCSGP) IF UCOM
SR_OUT
TXD_SR
RXD_SR
SR_OUT
TXD_232C
RXD_232C
RS232C
IO_AUDIO ASSY
IC7201 EDD5116AFTA (512Mbit DDR)
Add0-12
Data0-15
IC7202 AGC1073 (S29GL032A90TFIR4) (32Mbit FLASH)
IC7003 uPD61123F1 (EMMA IISV)
IC7004 BR24L64F (EEPROM)
DIN7 OSD 8bit *4
RGB 10bit *3
RGB 10bit *3
To DIGITAL ASSY
DIN1_DVO (12bit)
IC6702 EDD1232ABBH 128Mbit (DDR)
IC6703 EDD1232ABBH 128Mbit (DDR)
IC6704 EDD1232ABBH 128Mbit (DDR)
IC6701 AGC1078 (S29GL016A90TFIR2) 16Mbit Flash
DIN3_656DATA (10bit)
DIN4_656DATA (8bit)
IC6501 PD6568A (ARIA)
DIN2(8Bit*3)
INT H/V, EXT H/V
SIDE HDMI ASSY
IC4901 SII9125CTU (HDMI RX)
DIN6 12bit *3
M20 JA4901
H2 JA7302
IC7302 CXB1443R (HDMI SW)
INPUT7 HDMI

4.5 POWER SUPPLY UNIT

POWER SUPPLY UNIT

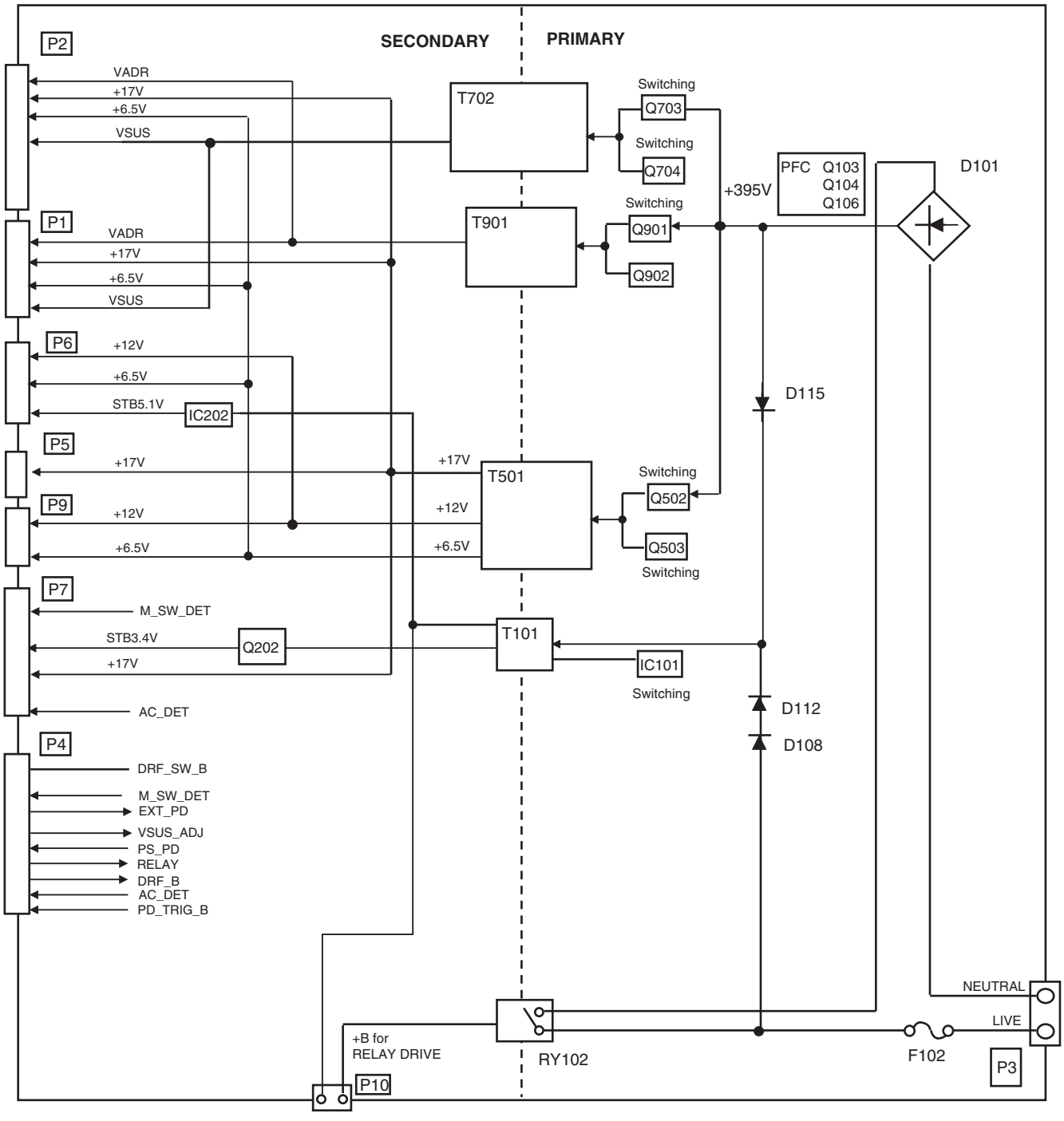

A

B

C

D

E

F

4.6 50F X DRIVE ASSY

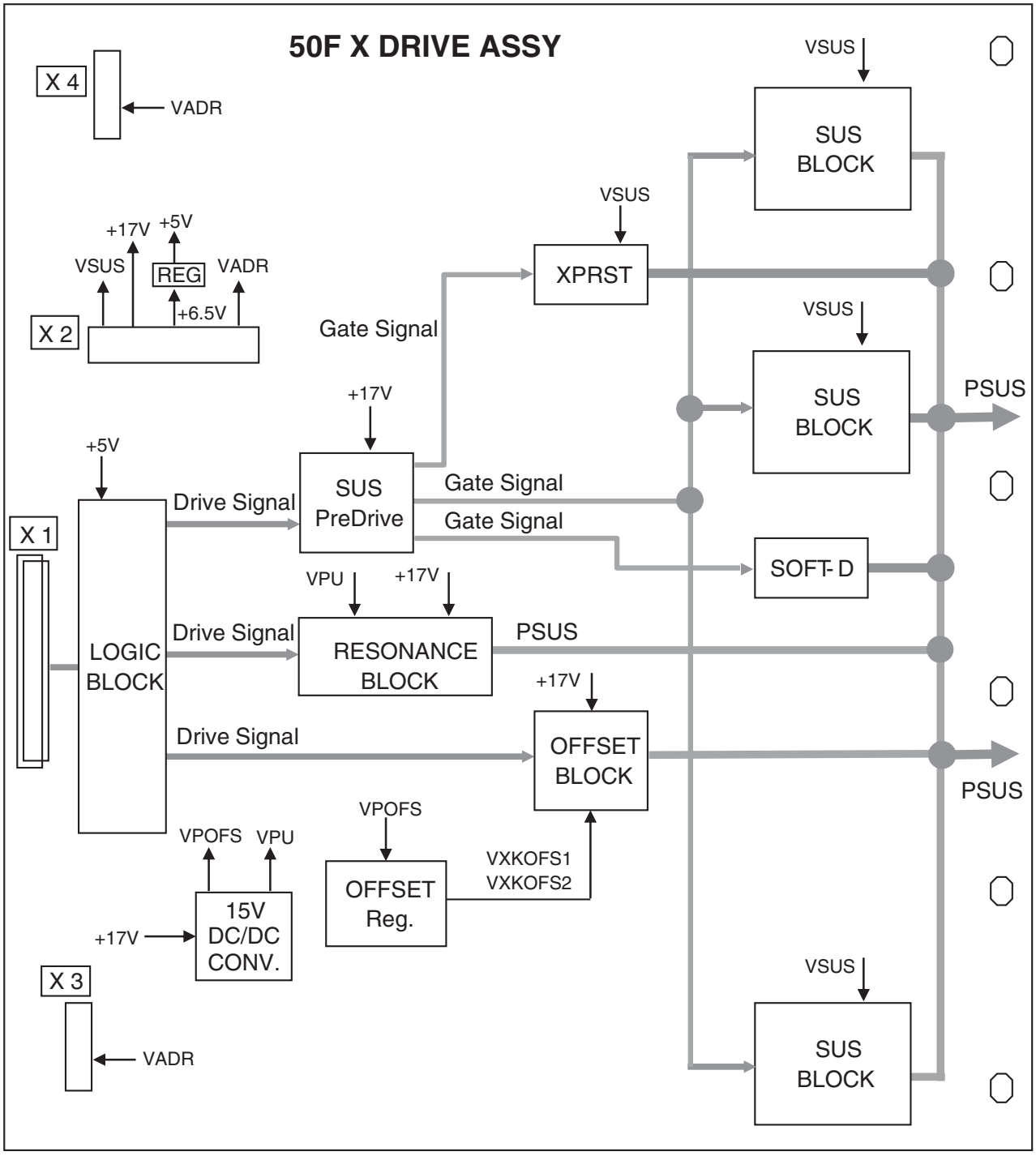

4.7 50F Y DRIVE, 50F SCAN A and B ASSYS

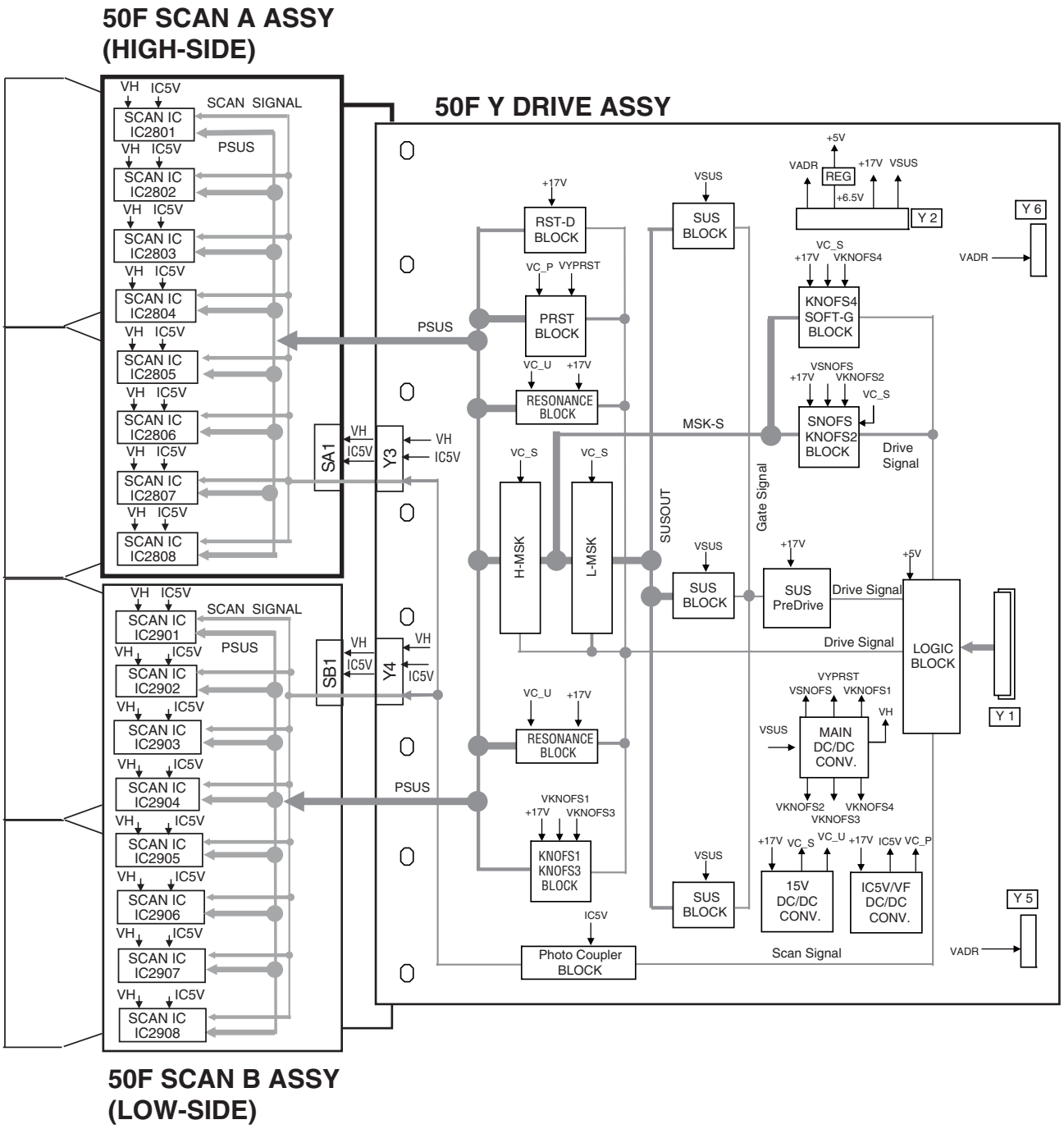

4.8 POWER SUPPLY BLOCK of 50F X, Y DRIVE and 50F SCAN A and B ASSYS

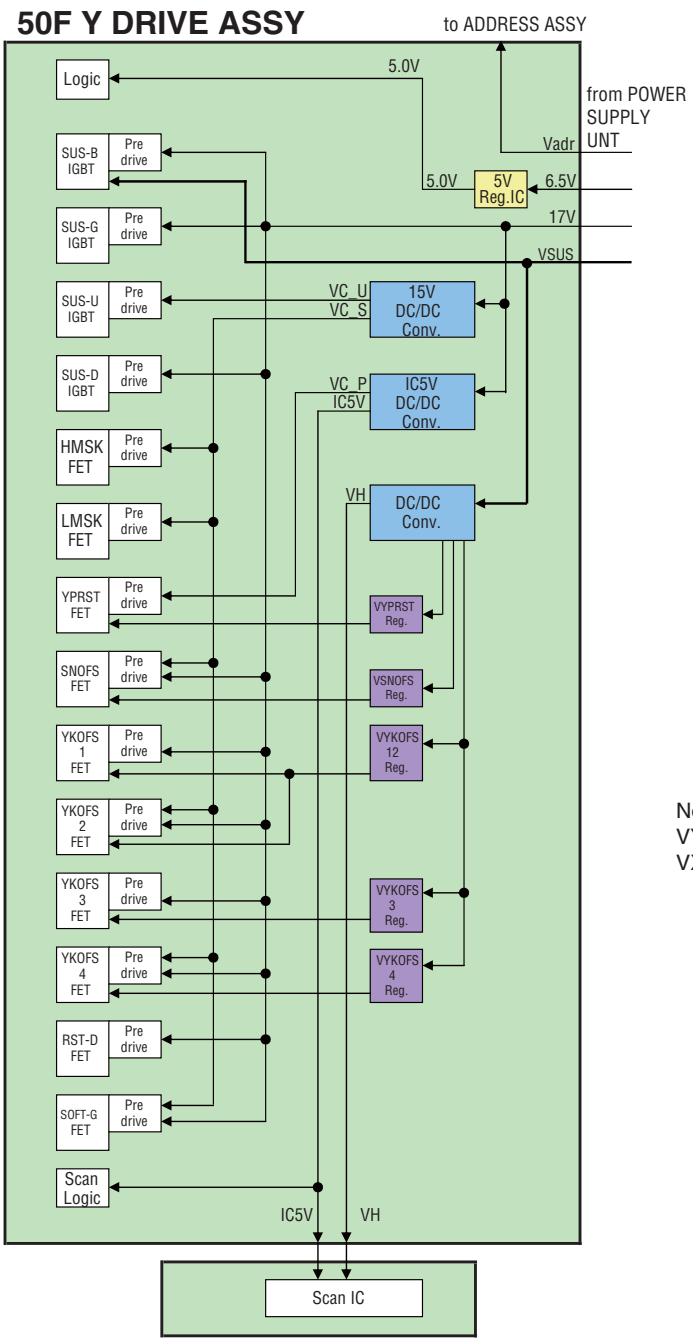

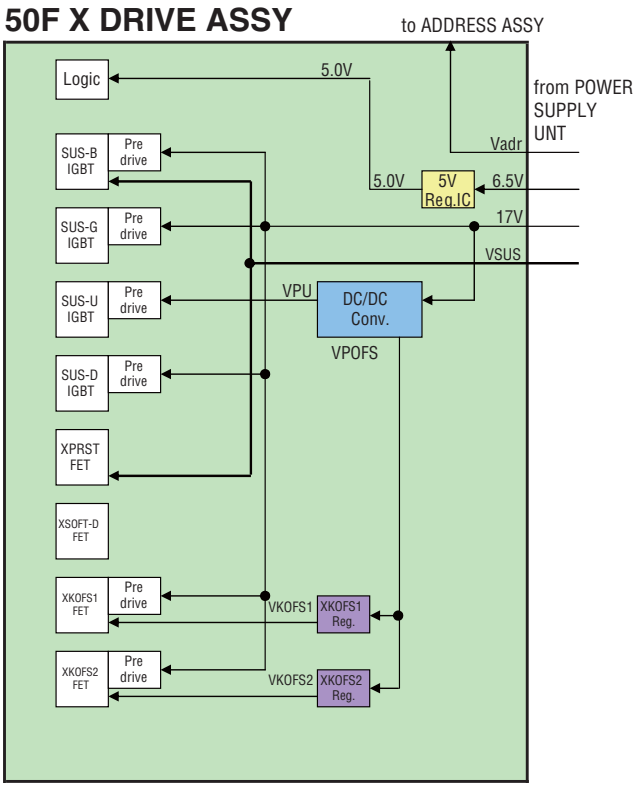

Note:
VYPRST, VSNOFS, VYKOFS12, VYKOFS3, VYKOFS4
VXKOFS1 and VXKOFS2 voltages are electrical volume controls.

4.9 50F ADDRESS L and S ASSYS

50F ADDRESS L ASSY

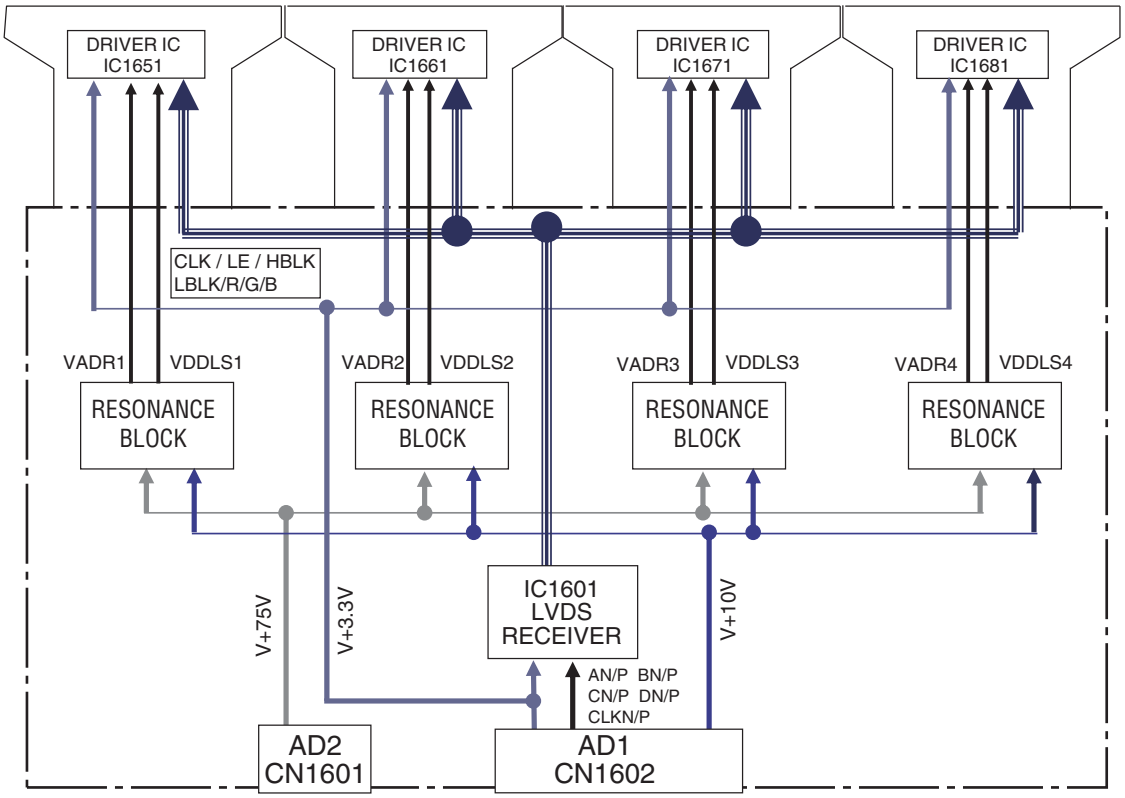

50F ADDRESS S ASSY

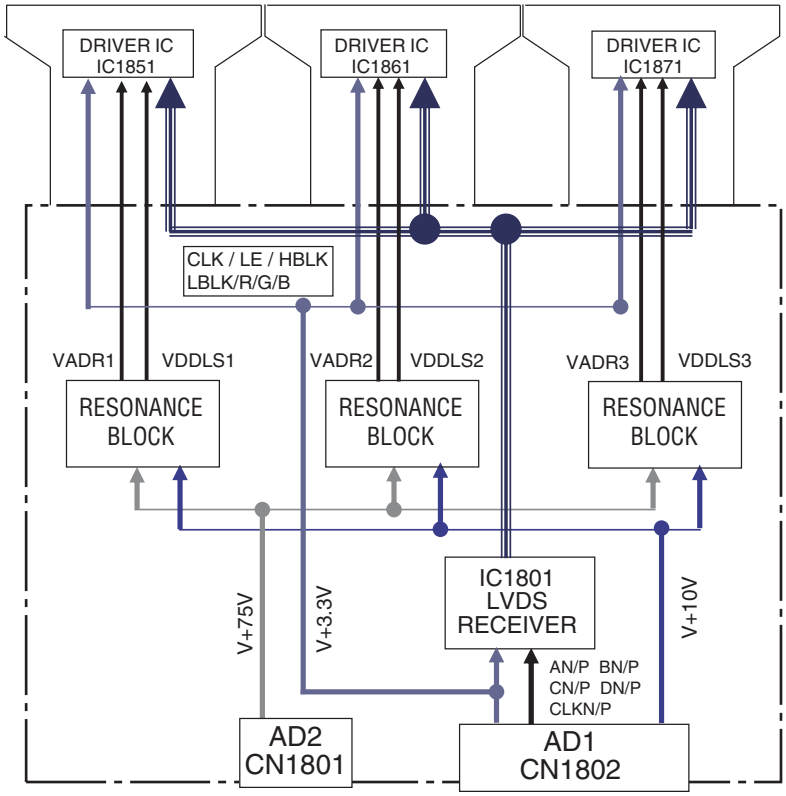

4.10 50F DIGITAL ASSY

50F DIGITAL ASSY

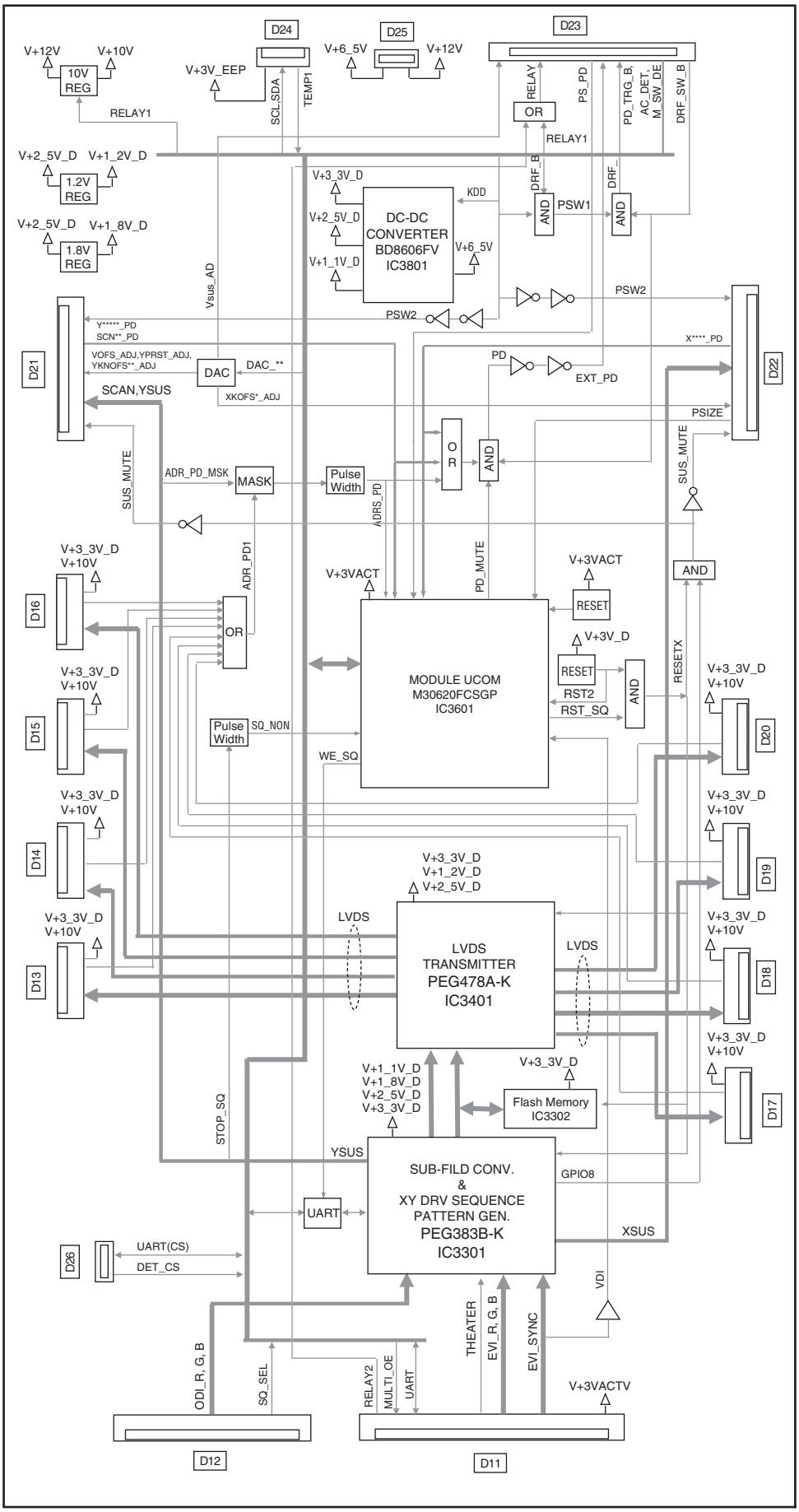

4.11 MAIN ASSY (DTV BLOCK DIAGRAM)

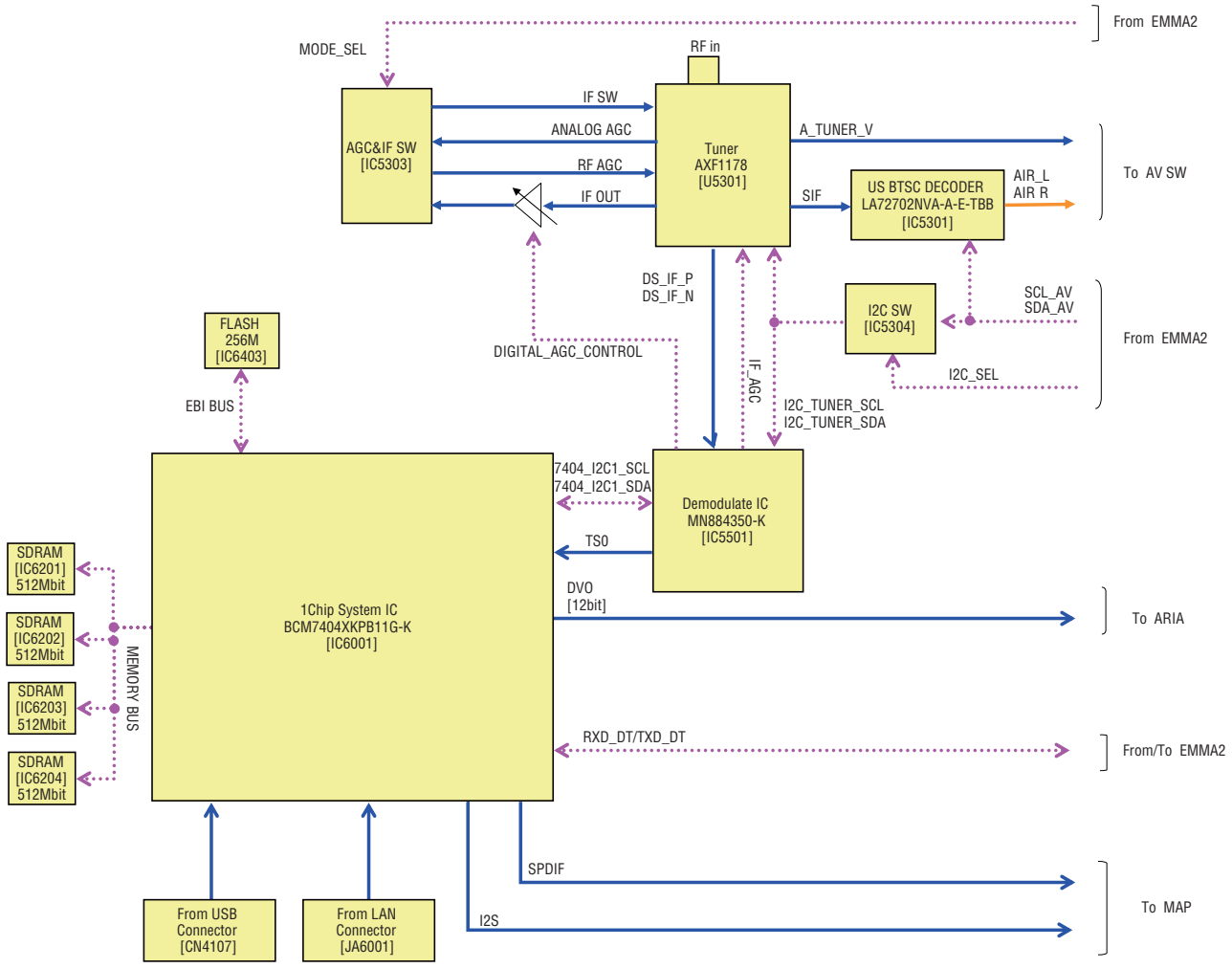

4.12 POWER SUPPLY BLOCK of MAIN ASSY

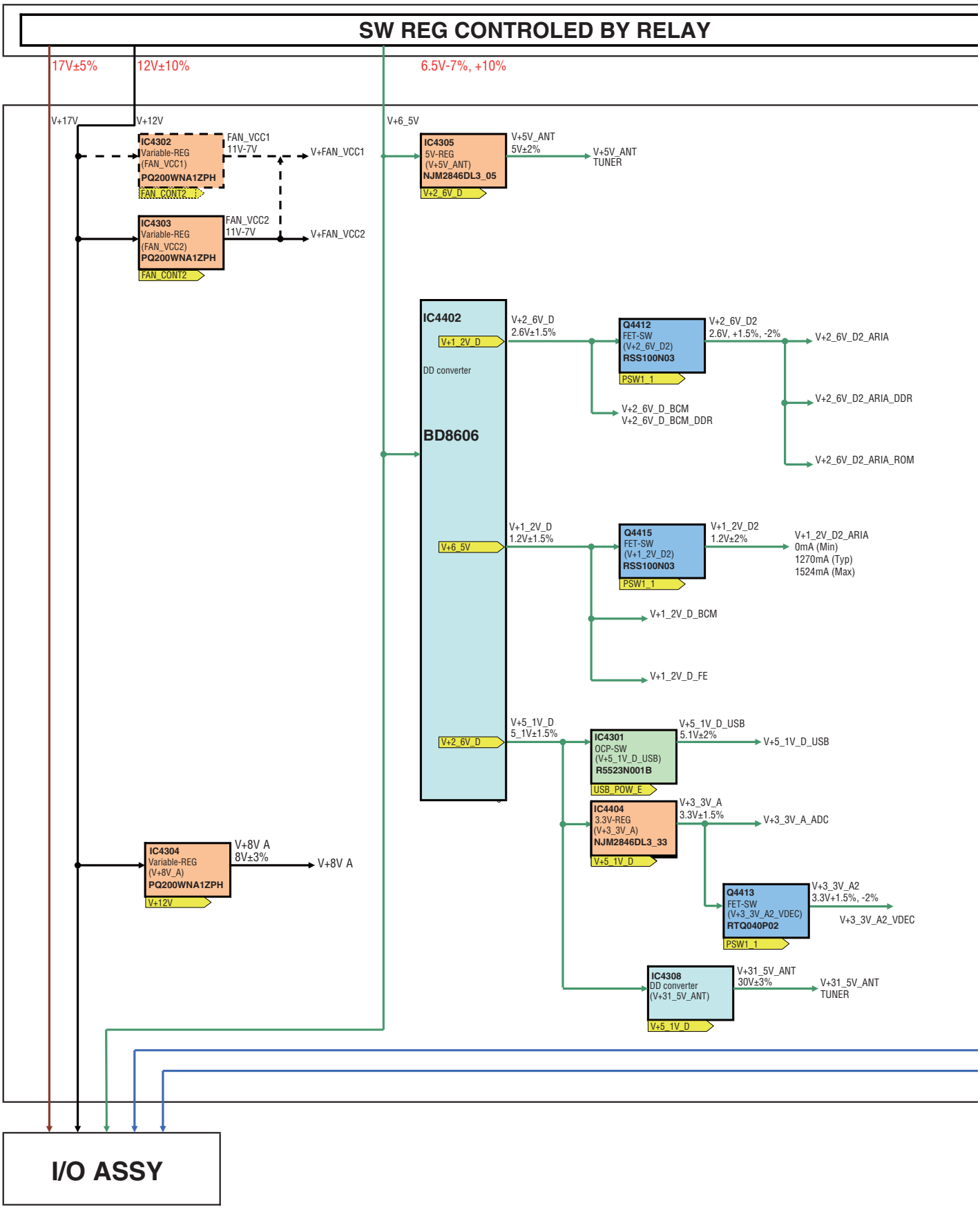

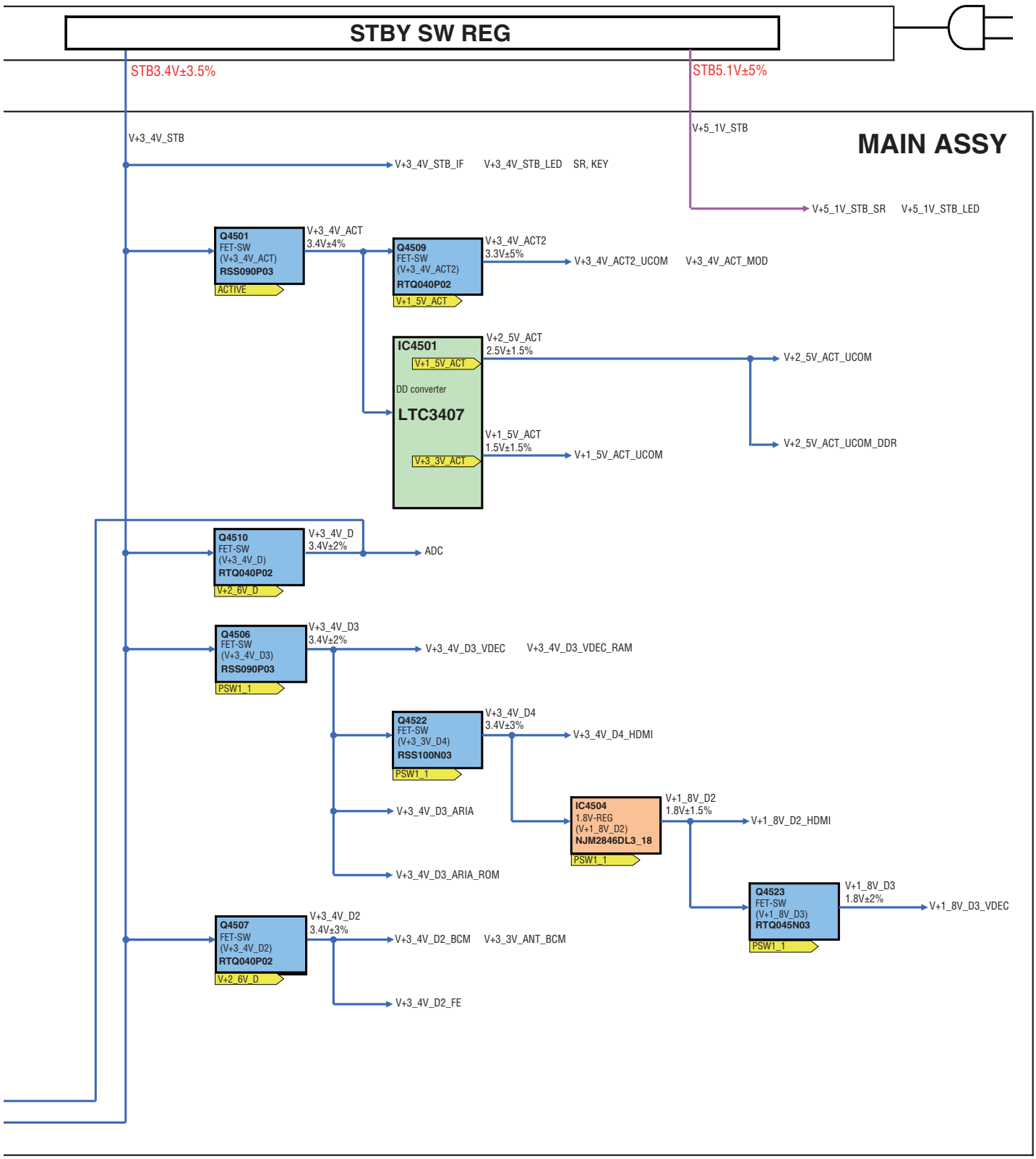
STBY SW REG
STB3.4V±3.5%
STB5.1V±5%
MAIN ASSY
V+3_4V_STB
V+5_1V_STB
V+3_4V_STB_IF
V+3_4V_STB_LED
SR, KEY
V+5_1V_STB_SR
V+5_1V_STB_LED
Q4501
FET-SW
(V+3_4V_ACT)
RSS090P03
ACTIVE
V+3_4V_ACT
3.4V±4%
Q4509
FET-SW
(V+3_4V_ACT2)
RTQ040P02
V+1_5V_ACT
V+3_4V_ACT2
3.3V±5%
V+3_4V_ACT2_UCOM
V+3_4V_ACT_MOD
IC4501
V+1_5V_ACT
DD converter
LTC3407
V+3_3V_ACT
V+2_5V_ACT
2.5V±1.5%
V+2_5V_ACT_UCOM
V+2_5V_ACT_UCOM_DDR
V+1_5V_ACT
1.5V±1.5%
V+1_5V_ACT_UCOM
Q4510
FET-SW
(V+3_4V_D)
RTQ040P02
V+2_6V_D
V+3_4V_D
3.4V±2%
ADC
Q4506
FET-SW
(V+3_4V_D3)
RSS090P03
PSW1_1
V+3_4V_D3
3.4V±2%
V+3_4V_D3_VDEC
V+3_4V_D3_VDEC_RAM
Q4522
FET-SW
(V+3_3V_D4)
RSS100N03
PSW1_1
V+3_4V_D4
3.4V±3%
V+3_4V_D4_HDMI
V+3_4V_D3_ARIA
V+3_4V_D3_ARIA_ROM
IC4504
1.8V-REG
(V+1_8V_D2)
NJM2846DL3_18
PSW1_1
V+1_8V_D2
1.8V±1.5%
V+1_8V_D2_HDMI
Q4523
FET-SW
(V+1_8V_D3)
RTQ045N03
PSW1_1
V+1_8V_D3
1.8V±2%
V+1_8V_D3_VDEC
Q4507
FET-SW
(V+3_4V_D2)
RTQ040P02
V+2_6V_D
V+3_4V_D2
3.4V±3%
V+3_4V_D2_BCM
V+3_3V_ANT_BCM
V+3_4V_D2_FE

4.13 IO_AUDIO ASSY

IO_AUDIO ASS'Y

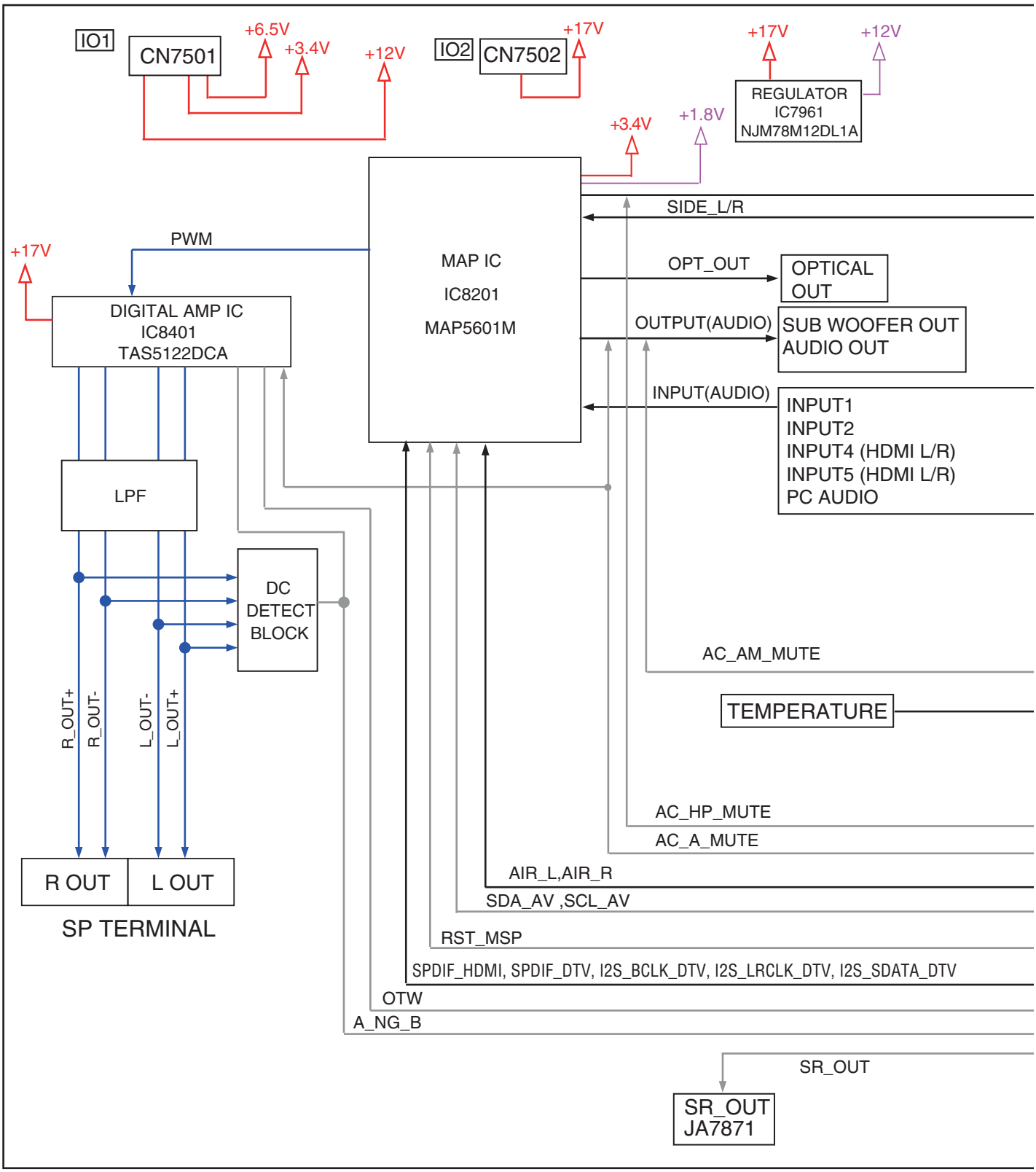

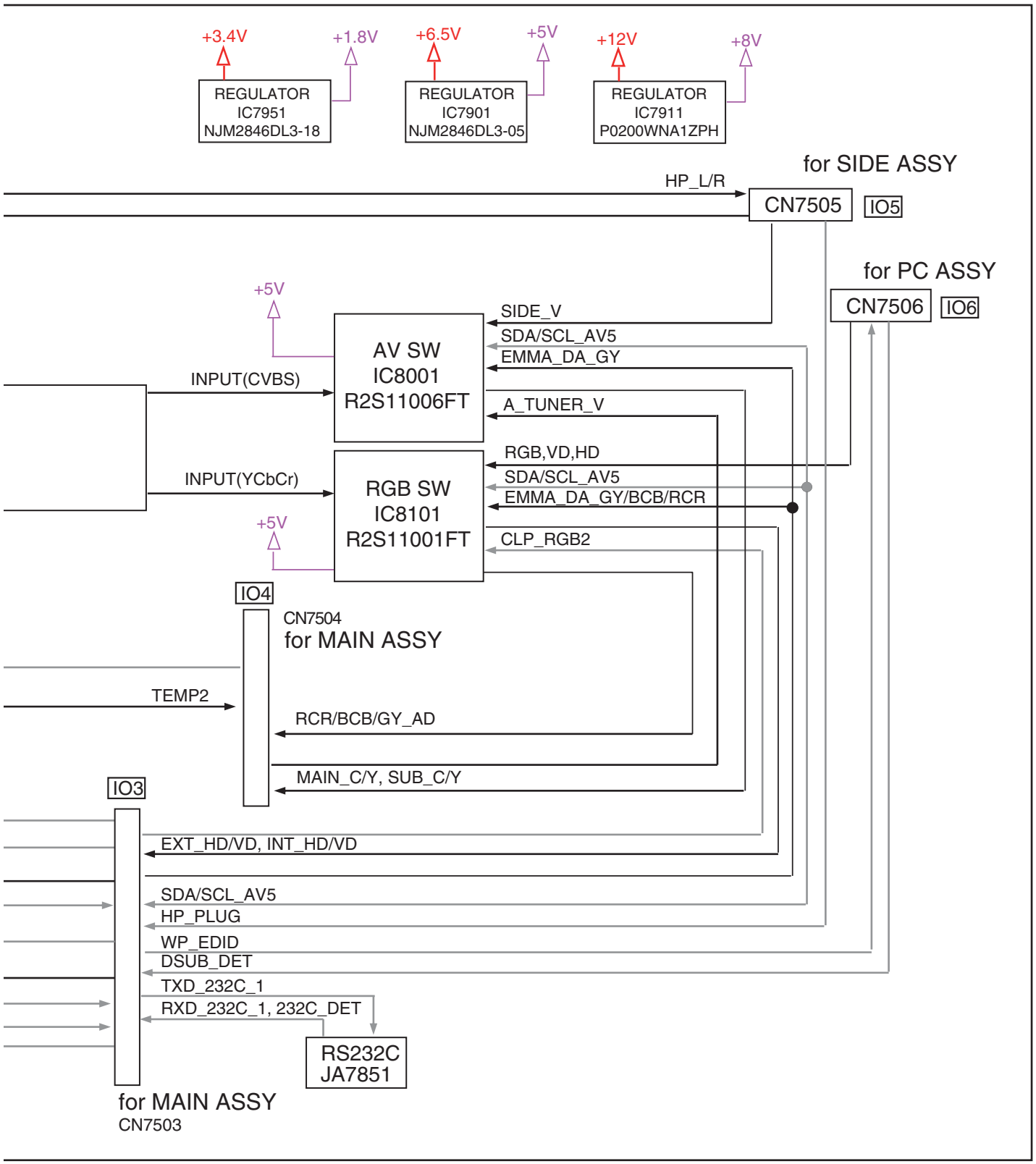
+3.4V
+1.8V
+6.5V
+5V
+12V
+8V
REGULATOR
IC7951
NJM2846DL3-18
REGULATOR
IC7901
NJM2846DL3-05
REGULATOR
IC7911
P0200WNA1ZPH
for SIDE ASSY
HP_L/R
CN7505
IO5
for PC ASSY
CN7506
IO6
+5V
AV SW
IC8001
R2S11006FT
INPUT(CVBS)
SIDE_V
SDA/SCL_AV5
EMMA_DA_GY
A_TUNER_V
RGB SW
IC8101
R2S11001FT
INPUT(YCbCr)
RGB,VD,HD
SDA/SCL_AV5
EMMA_DA_GY/BCB/RCR
CLP_RGB2
IO4
CN7504
for MAIN ASSY
TEMP2
RCR/BCB/GY_AD
MAIN_C/Y, SUB_C/Y
IO3
EXT_HD/VD, INT_HD/VD
SDA/SCL_AV5
HP_PLUG
WP_EDID
DSUB_DET
TXD_232C_1
RXD_232C_1, 232C_DET
RS232C
JA7851
for MAIN ASSY
CN7503

4.14 LED and IR ASSYS

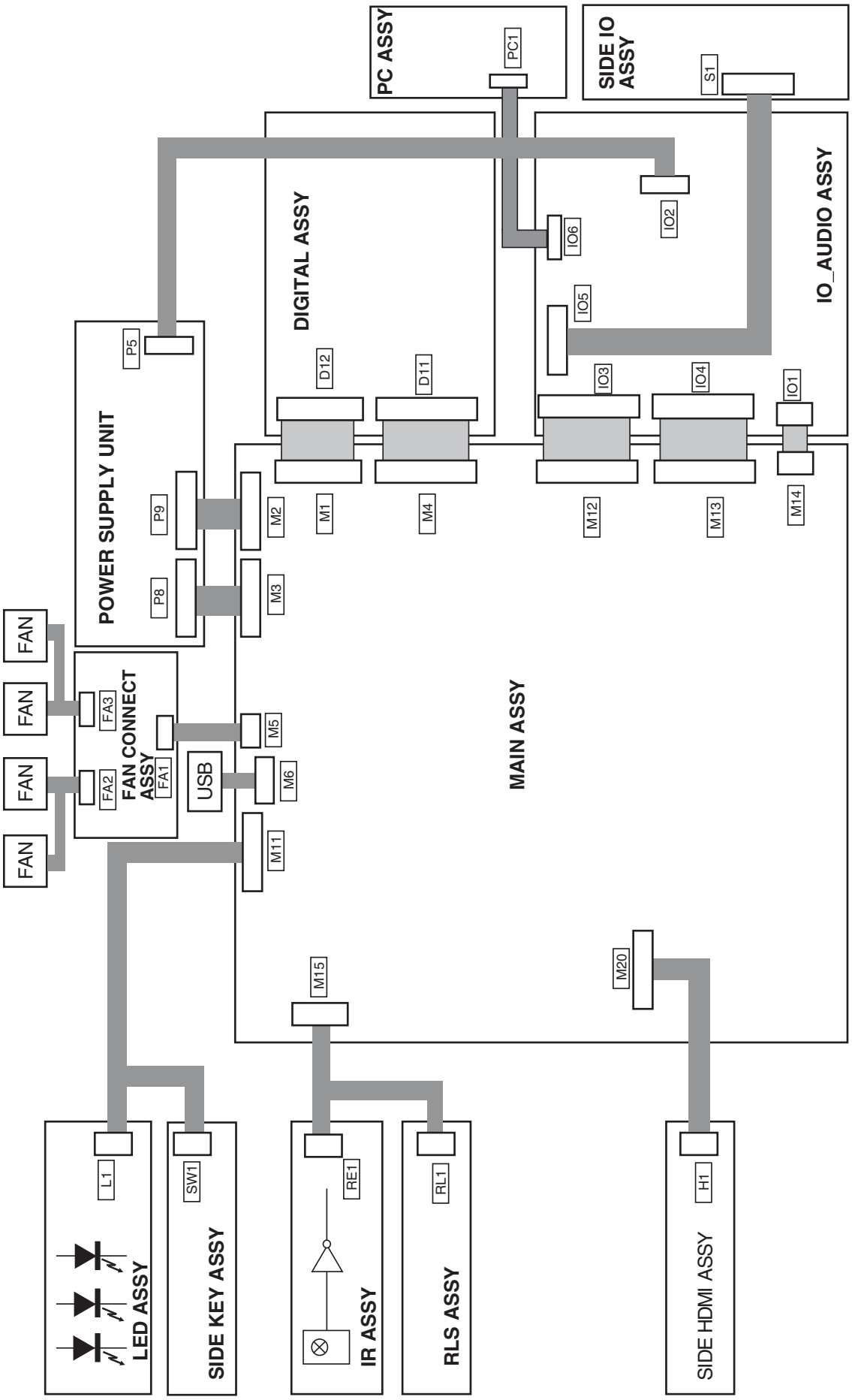

5. DIAGNOSIS
5.1 POWER SUPPLY OPERATION

[1] LED DISPLAY INFORMATION

LED Pattern

Status	LED	LED Pattern/Remarks
AC OFF or Main Power Switch OFF	Blue Red Orange	
Standby Power Management	Blue Red Orange	
Power On	Blue Red Orange	
Power-Down	Blue Red Orange	Once Twice n times 2.5s Once 500ms *1
Shutdown	Blue Red Orange	500ms *2 Once Twice n times 2.5s Once
Shutdown (Subcategory flashing)	Blue Red Orange	500ms *2 Once Twice n times 2.5s Once 500ms *3
No digital adjustment data copied for backup	Blue Red Orange	200ms
Updating the PC	Blue Red Orange	100ms 100ms
During factory operation	Blue Red Orange	
During DTB communication inhibit	Blue Red Orange	100ms
During USB update	Blue Red Orange	100ms 100ms
Updating of USB is finished normally.	Blue Red Orange	100ms 100ms
Updating of USB is abnormally finished.	Blue Red Orange	100ms 100ms 500ms Once 500ms Twice 500ms n times 2.5sec 500ms *4
Sleep timer	Blue Red Orange	

*1: Notify upon the power-down content by Red LED flashing number of times.
*2: Notify upon the shutdown content by Blue LED flashing number of times
*3: Notify upon the subcategory number by Orange LED flashing number of times.
*4: Notify upon the abnormal state by Orange LED flashing number of times.

[2] POWER ON SEQUENCE

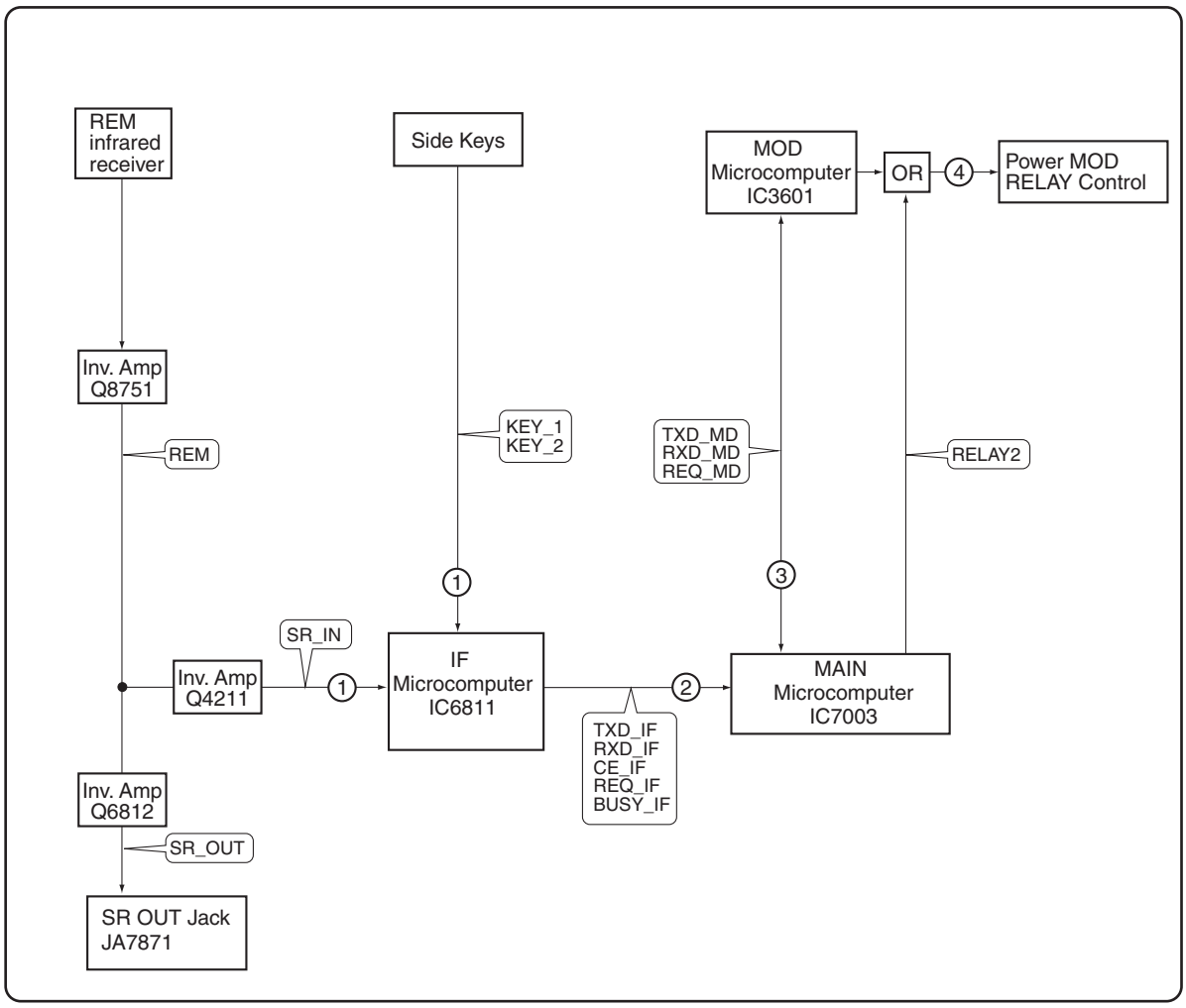

① : The remote control (or KEY) signal is input to the IF microcomputer.
② : The IF microcomputer sends the operation data of the remote control unit (or KEY) to the main microcomputer.
③ : The main microcomputer issues a startup command (PON) to the MOD microcomputer.
④ : The relay is controlled with logical OR interpretation of control signals by the main microcomputer and module (MOD) microcomputer.

[3] DETAILS OF POWER ON SEQUENCE

AC-OFF Main Power OFF, Passive Standby

Front LED: OFF

Microcomputer output port setting

IF: ACTIVE	OFF
Main: RELAY2	OFF
Main: PSW1	OFF
Module: RELAY1•KDD	OFF
Module: DRF_B	OFF

Microcomputer input port state

Main: RST4	OFF
Main: RST2	OFF
Module: RST2	OFF

(*): PRO-111FD only

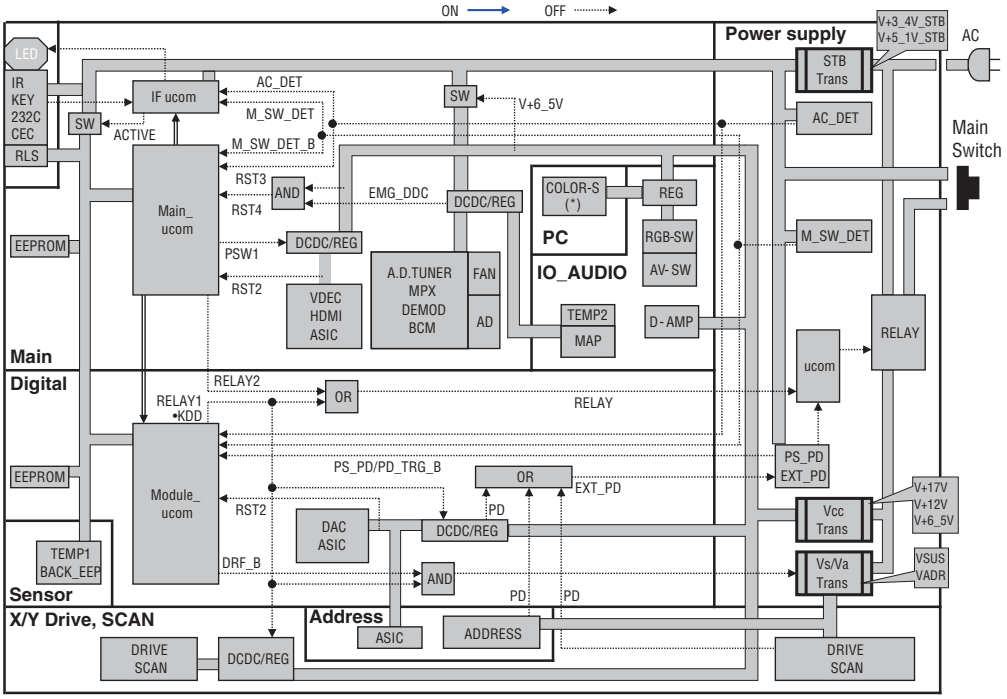

All devices are not electrified.

AC-ON Main Power OFF, Passive Standby

Front LED: OFF

Microcomputer output port setting

IF: ACTIVE	OFF
Main: RELAY2	OFF
Main: PSW1	OFF
Module: RELAY1•KDD	OFF
Module: DRF_B	OFF

Microcomputer input port state

Main: RST4	OFF
Main: RST2	OFF
Module: RST2	OFF

(*): PRO-111FD only

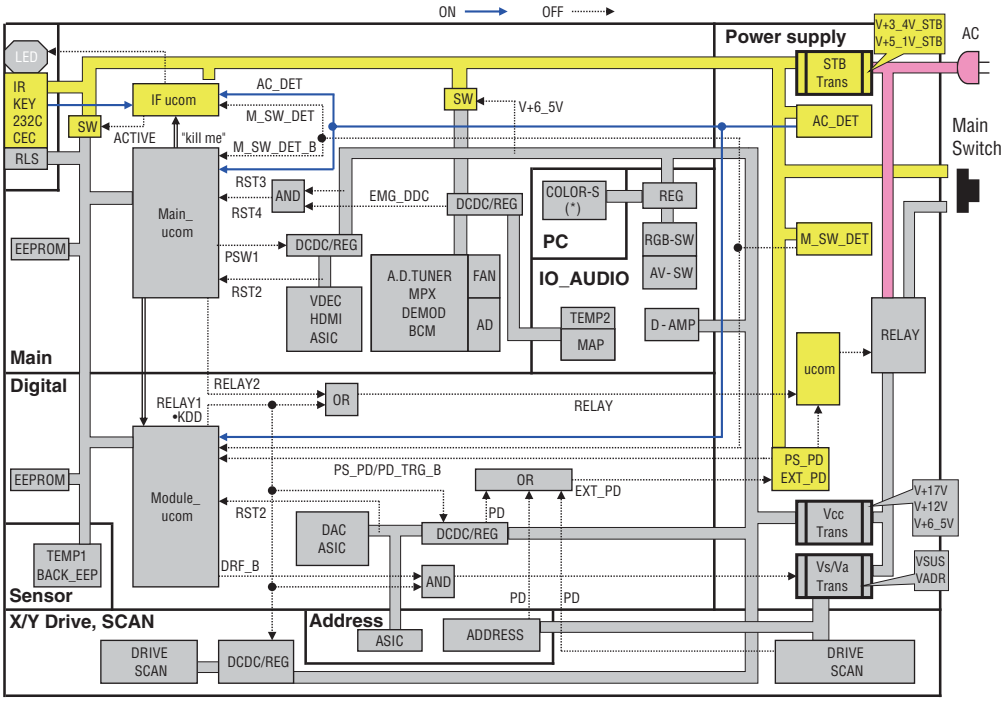

Only the periphery of the IF microcomputer are electrified.
The user operation is invalid due to Main Switch off.

AC-ON Main Power OFF, Active Standby

Front LED: OFF

Microcomputer output port setting

IF: ACTIVE	ON
Main: RELAY2	OFF
Main: PSW1	OFF
Module: RELAY1•KDD	OFF
Module: DRF_B	OFF

Microcomputer input port state

Main: RST4	OFF
Main: RST2	OFF
Module: RST2	OFF

(*): PRO-111FD only

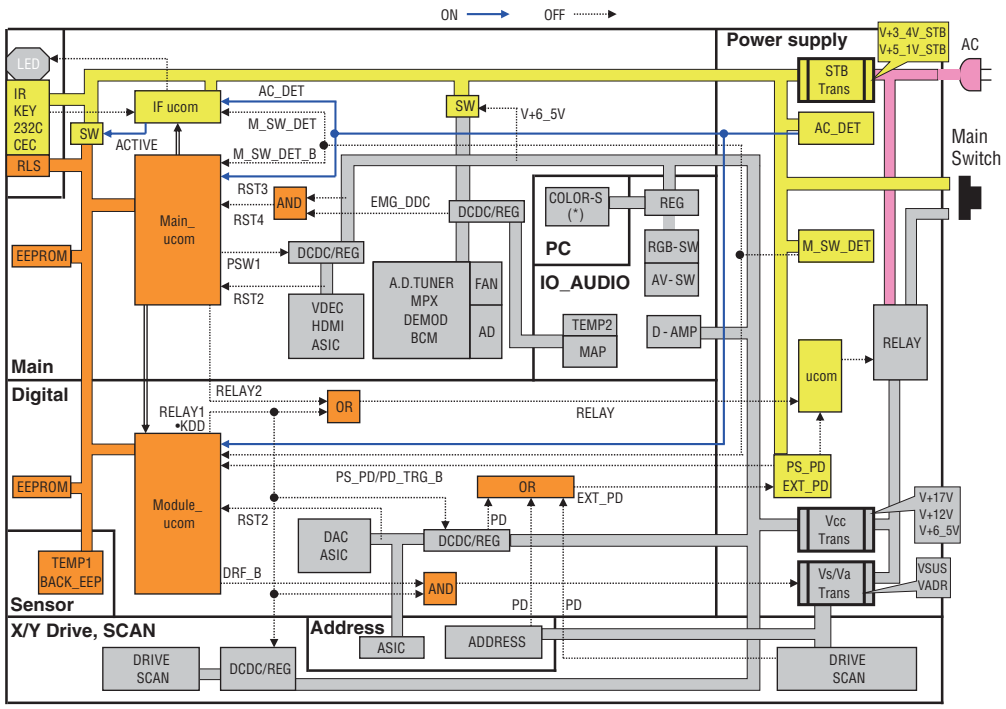

Periphery of the IF, Main and Module microcomputers are operated.
The user operation is invalid due to Main Switch off.

AC-ON Main Power ON, Passive Standby

Front LED: RED

Microcomputer output port setting

IF: ACTIVE	OFF
Main: RELAY2	OFF
Main: PSW1	OFF
Module: RELAY1•KDD	OFF
Module: DRF_B	OFF

Microcomputer input port state

Main: RST4	OFF
Main: RST2	OFF
Module: RST2	OFF

(*): PRO-111FD only

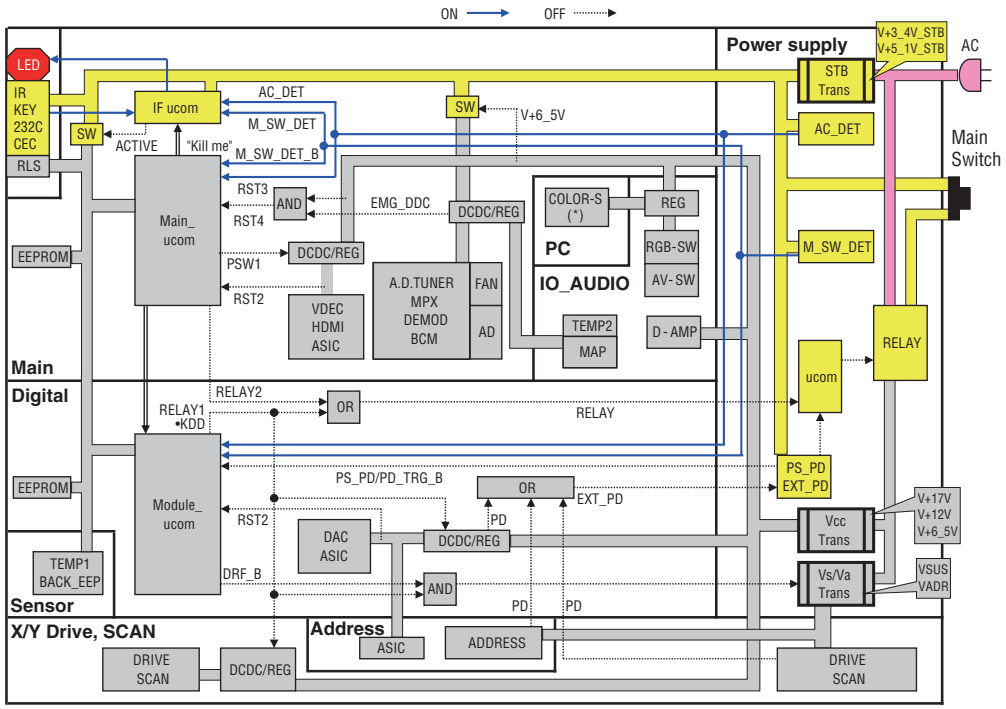

Only the periphery of the IF microcomputer is electrified.
The user operation is valid.

AC-ON Main Power ON, Active Standby

Front LED: RED

Microcomputer output port setting

IF: ACTIVE	ON
Main: RELAY2	OFF
Main: PSW1	OFF
Module: RELAY1•KDD	OFF
Module: DRF_B	OFF

Microcomputer input port state

Main: RST4	OFF
Main: RST2	OFF
Module: RST2	OFF

(*): PRO-111FD only

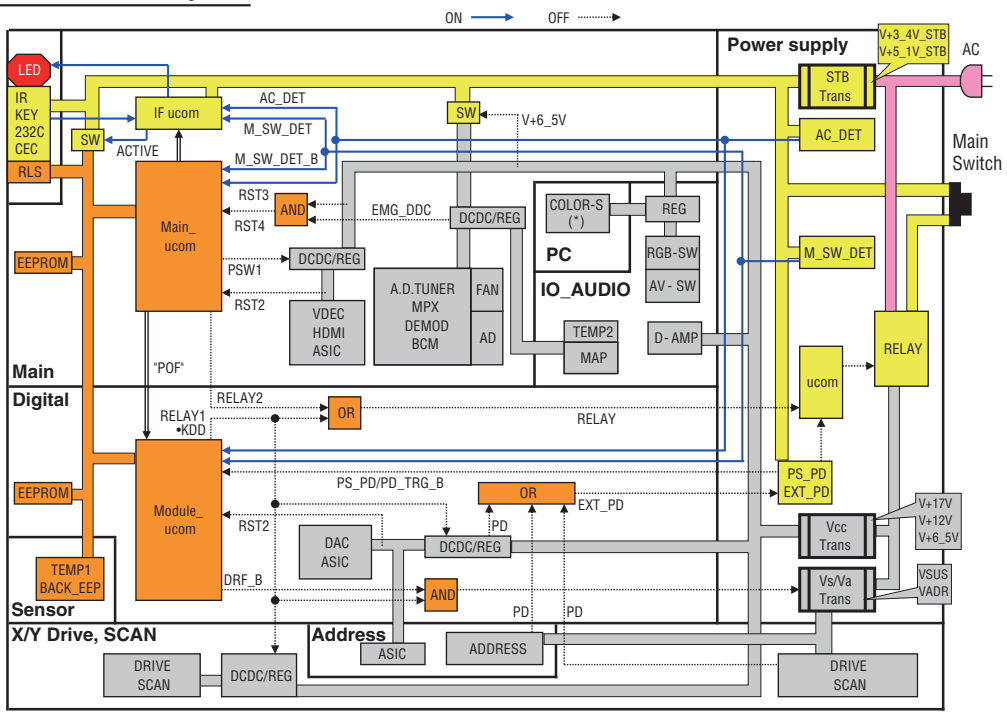

Periphery of the IF, Main and Module microcomputers are operated.
The user operation is valid.

AC-ON Main Power ON, Function Standby

Front LED: RED

Microcomputer output port setting

IF: ACTIVE	ON
Main: RELAY2	ON
Main: PSW1	OFF
Module: RELAY1•KDD	OFF
Module: DRF_B	OFF

Microcomputer input port state

Main: RST4	ON
Main: RST2	OFF
Module: RST2	OFF

(*): PRO-111FD only

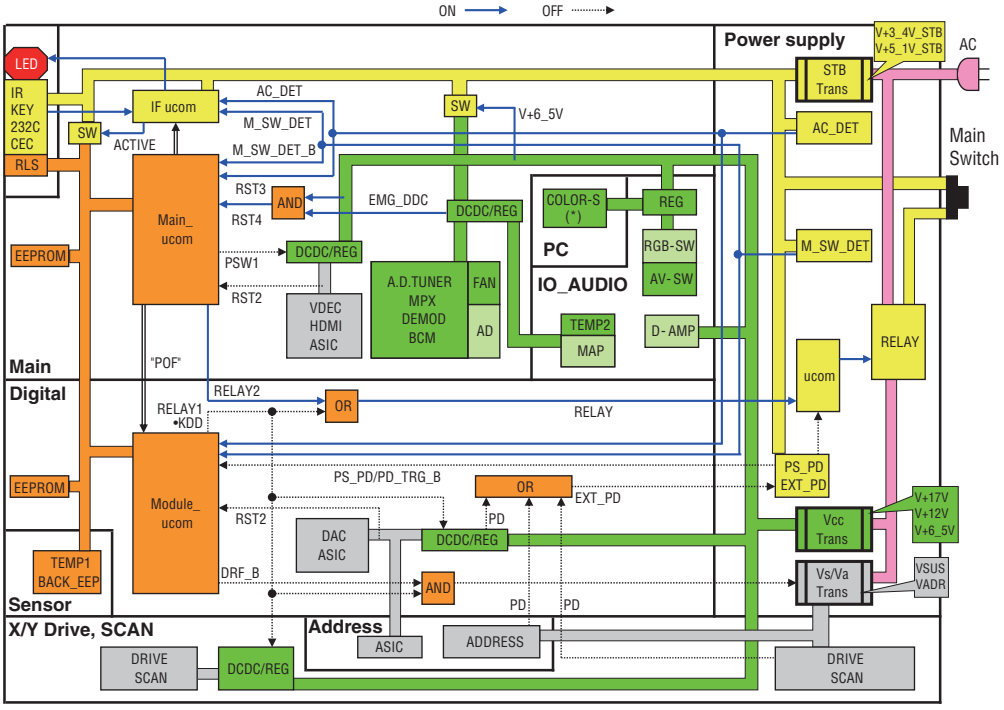

Standby power device and some Vcc power devices operate.
The user operation is valid.
RGB-SW/AD/D-AMP/MAP are electrified, but uses the power-saving mode function of the IC.

AC-ON Main Power ON, PDP Screen ON

Front LED: BLUE

Microcomputer output port setting

IF: ACTIVE	ON
Main: RELAY2	ON
Main: PSW1	ON
Module: RELAY1•KDD	ON
Module: DRF_B	ON

Microcomputer input port state

Main: RST4	ON
Main: RST2	ON
Module: RST2	ON

(*): PRO-111FD only

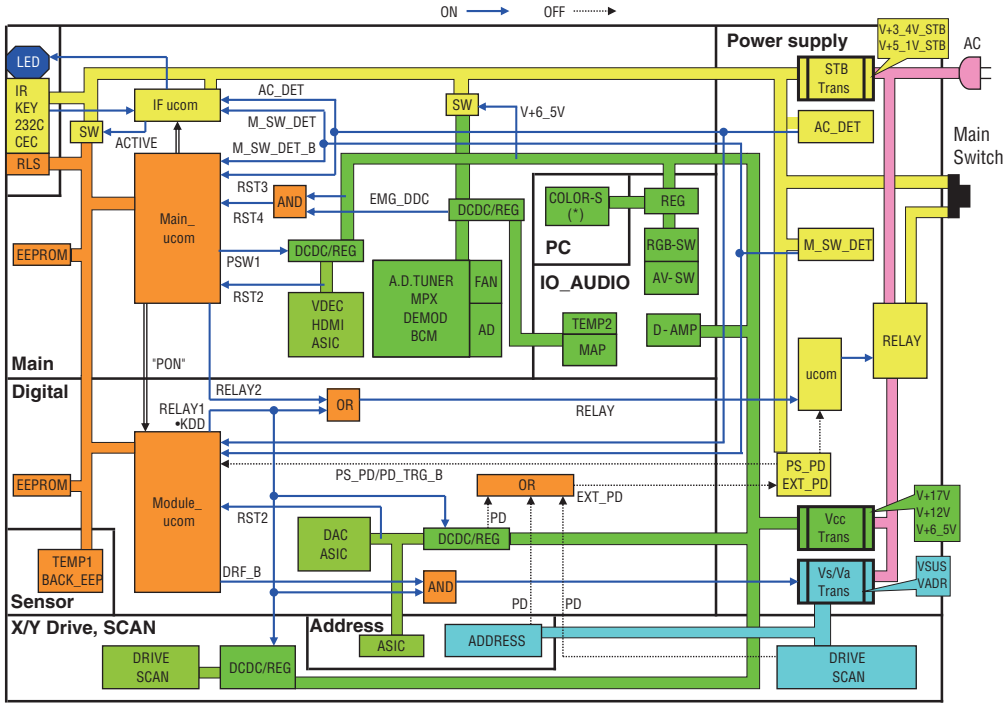

All devices are operated.

5.2 DIAGNOSIS FLOWCHART OF FAILURE ANALYSIS

[1] WHOLE UNIT

Flowchart of Failure Analysis for The Whole Unit

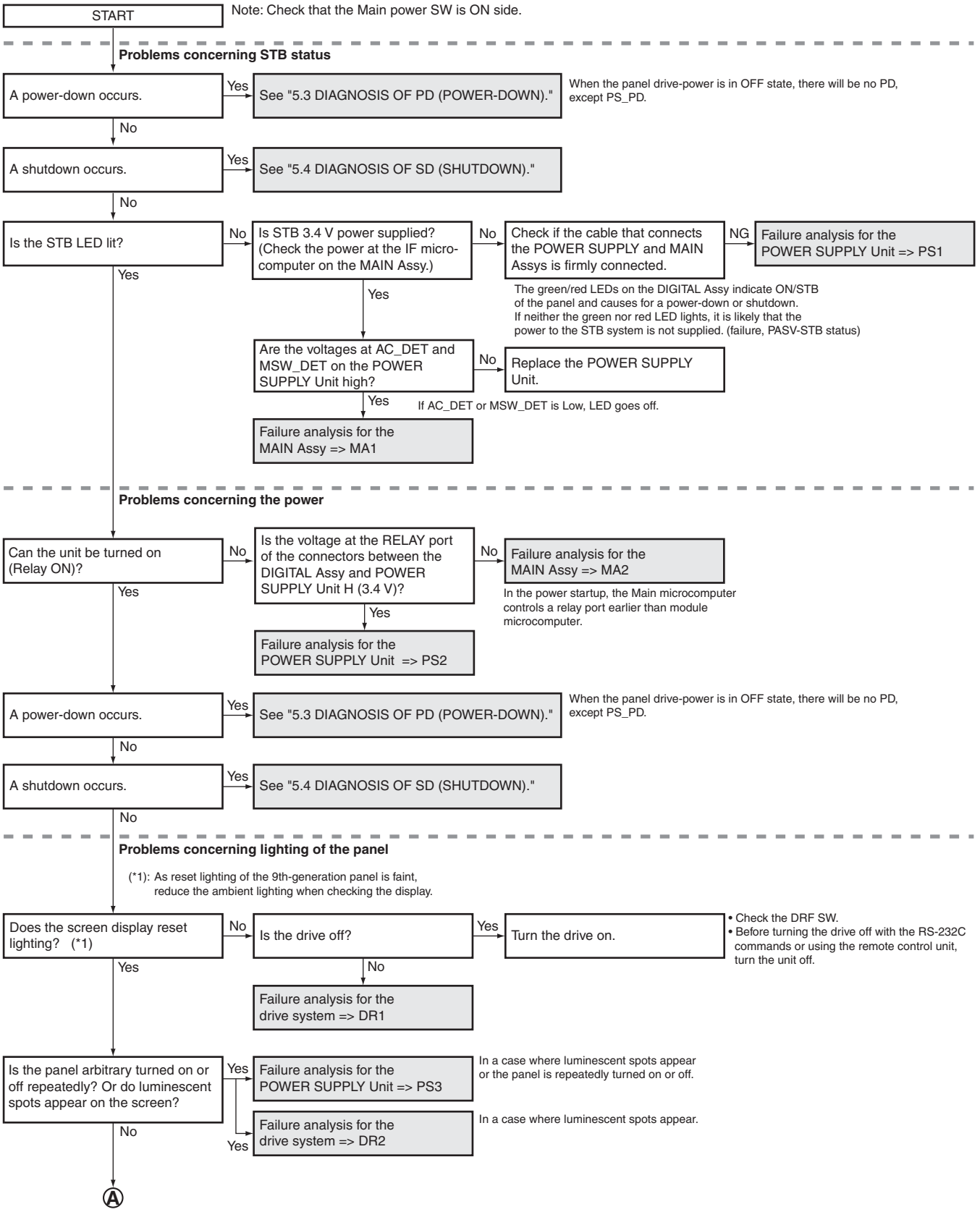

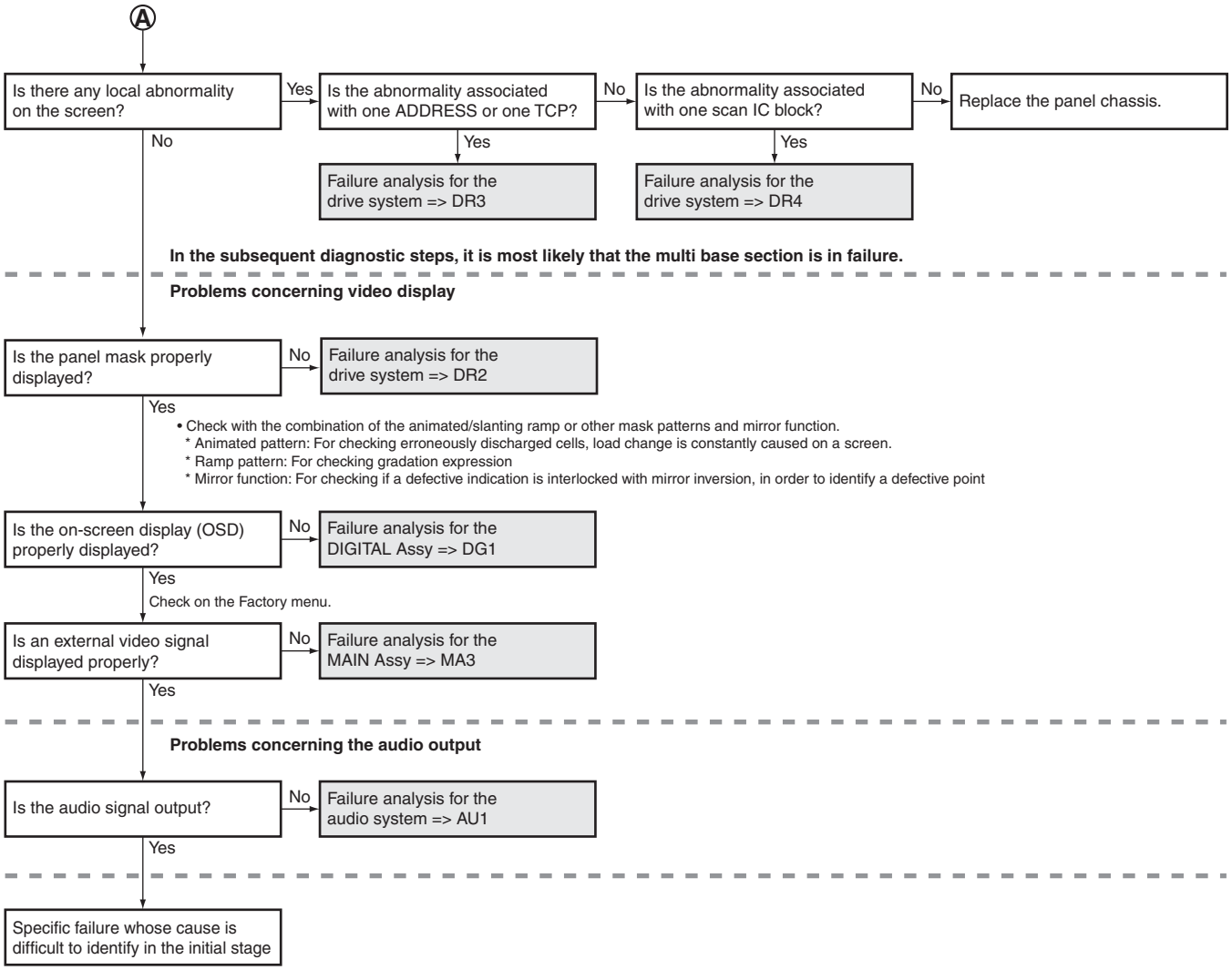
Ⓐ
Is there any local abnormality on the screen?
Yes
Is the abnormality associated with one ADDRESS or one TCP?
No
Is the abnormality associated with one scan IC block?
No
Replace the panel chassis.
No
Yes
Failure analysis for the drive system => DR3
Yes
Failure analysis for the drive system => DR4
In the subsequent diagnostic steps, it is most likely that the multi base section is in failure.
Problems concerning video display
Is the panel mask properly displayed?
No
Failure analysis for the drive system => DR2
Yes
• Check with the combination of the animated/slanting ramp or other mask patterns and mirror function.
* Animated pattern: For checking erroneously discharged cells, load change is constantly caused on a screen.
* Ramp pattern: For checking gradation expression
* Mirror function: For checking if a defective indication is interlocked with mirror inversion, in order to identify a defective point
Is the on-screen display (OSD) properly displayed?
No
Failure analysis for the DIGITAL Assy => DG1
Yes
Check on the Factory menu.
Is an external video signal displayed properly?
No
Failure analysis for the MAIN Assy => MA3
Yes
Problems concerning the audio output
Is the audio signal output?
No
Failure analysis for the audio system => AU1
Yes
Specific failure whose cause is difficult to identify in the initial stage

[2] POWER SUPPLY UNIT

Flowchart of Failure Analysis for The POWER SUPPLY Unit

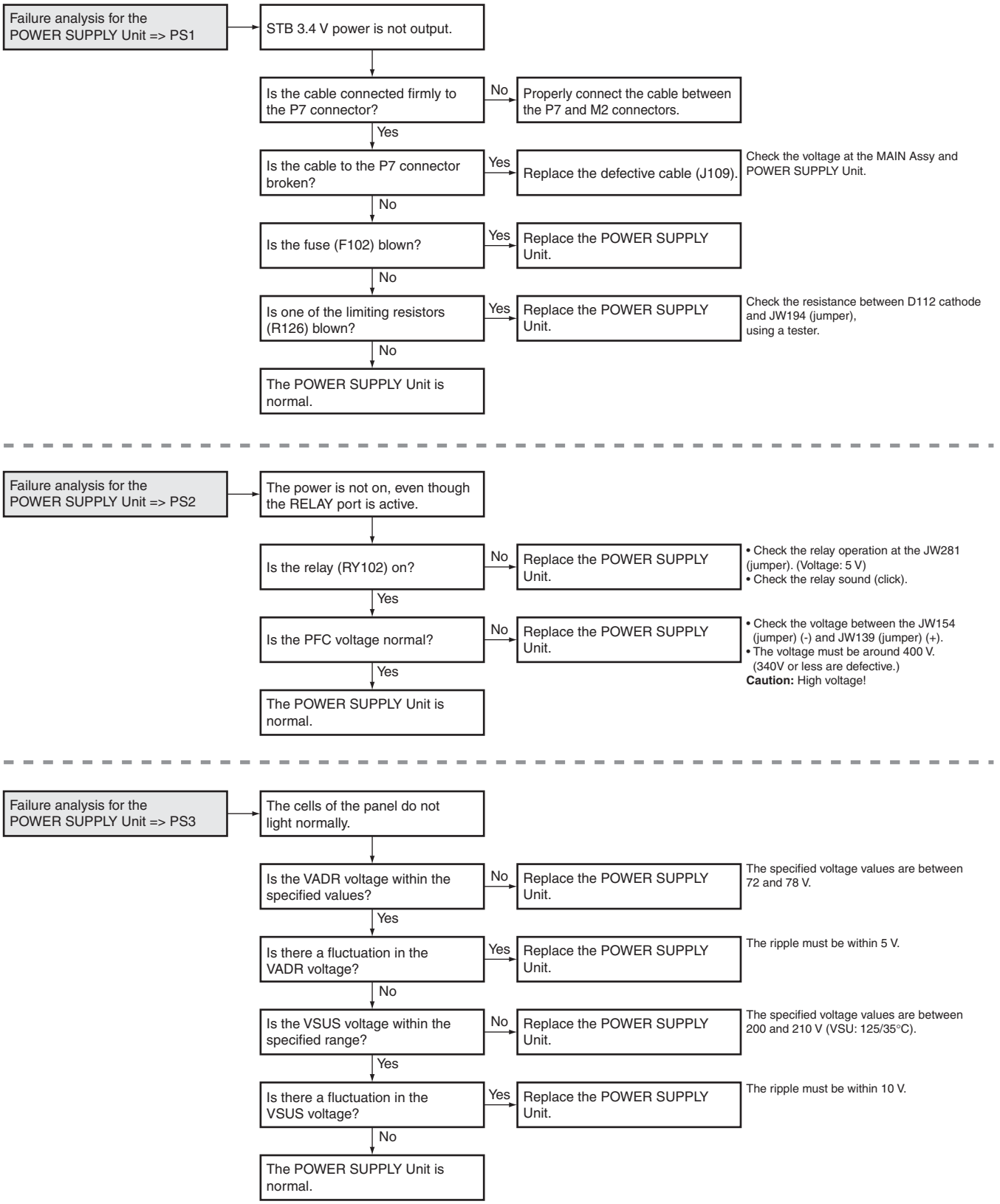

[3] DRIVE ASSY

Flowchart of Failure Analysis for The Drive Assy

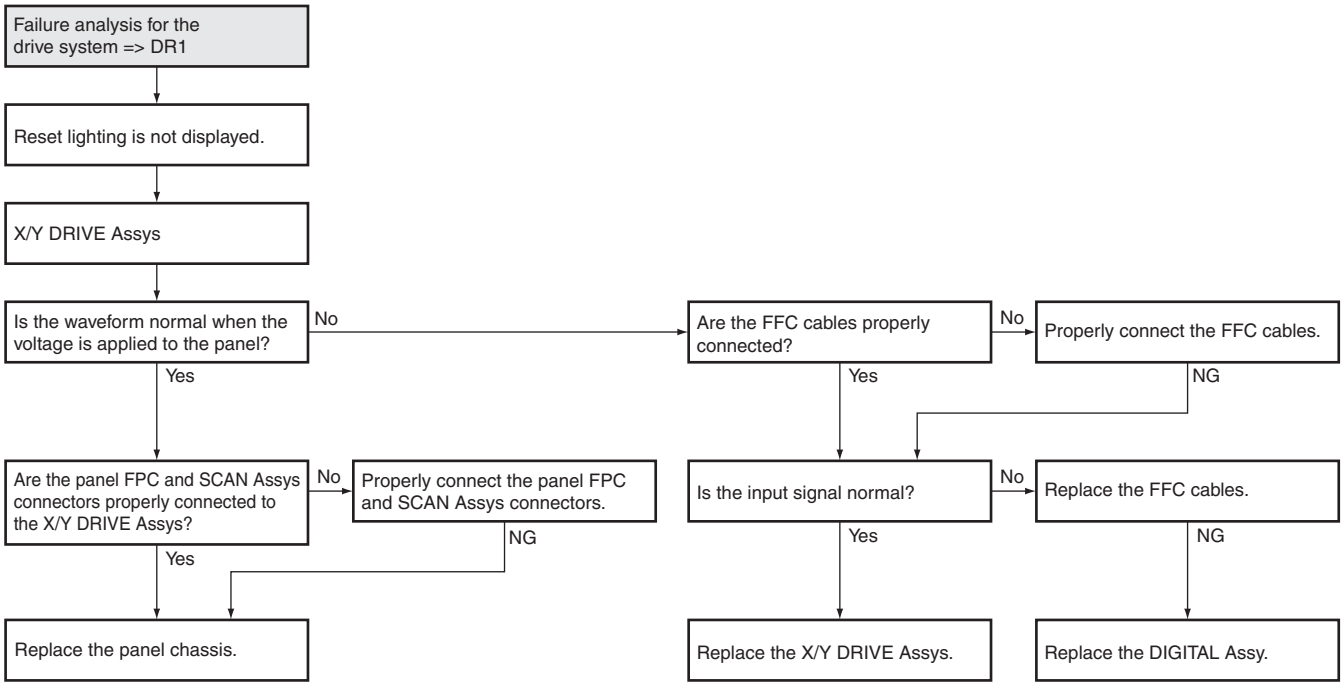

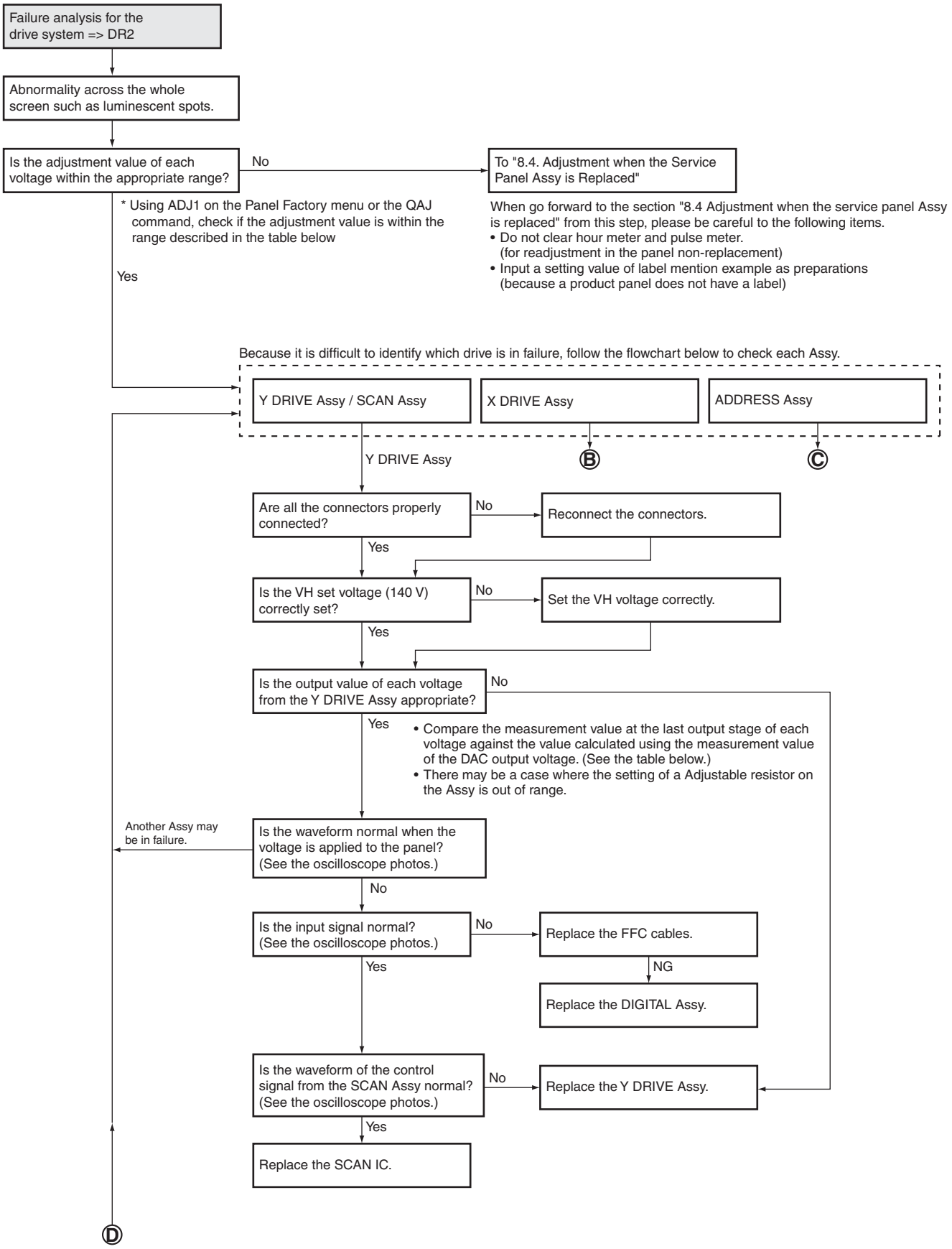
Failure analysis for the drive system => DR2
Abnormality across the whole screen such as luminescent spots.
Is the adjustment value of each voltage within the appropriate range?
No
To "8.4. Adjustment when the Service Panel Assy is Replaced"
* Using ADJ1 on the Panel Factory menu or the QAJ command, check if the adjustment value is within the range described in the table below
When go forward to the section "8.4 Adjustment when the service panel Assy is replaced" from this step, please be careful to the following items.
• Do not clear hour meter and pulse meter. (for readjustment in the panel non-replacement)
• Input a setting value of label mention example as preparations (because a product panel does not have a label)
Yes
Because it is difficult to identify which drive is in failure, follow the flowchart below to check each Assy.
Y DRIVE Assy / SCAN Assy
X DRIVE Assy
ADDRESS Assy
Ⓑ
Ⓒ
Y DRIVE Assy
Are all the connectors properly connected?
No
Reconnect the connectors.
Yes
Is the VH set voltage (140 V) correctly set?
No
Set the VH voltage correctly.
Yes
Is the output value of each voltage from the Y DRIVE Assy appropriate?
No
Yes
• Compare the measurement value at the last output stage of each voltage against the value calculated using the measurement value of the DAC output voltage. (See the table below.)
• There may be a case where the setting of a Adjustable resistor on the Assy is out of range.
Another Assy may be in failure.
Is the waveform normal when the voltage is applied to the panel? (See the oscilloscope photos.)
No
Is the input signal normal? (See the oscilloscope photos.)
No
Replace the FFC cables.
NG
Replace the DIGITAL Assy.
Yes
Is the waveform of the control signal from the SCAN Assy normal? (See the oscilloscope photos.)
No
Replace the Y DRIVE Assy.
Yes
Replace the SCAN IC.
Ⓓ

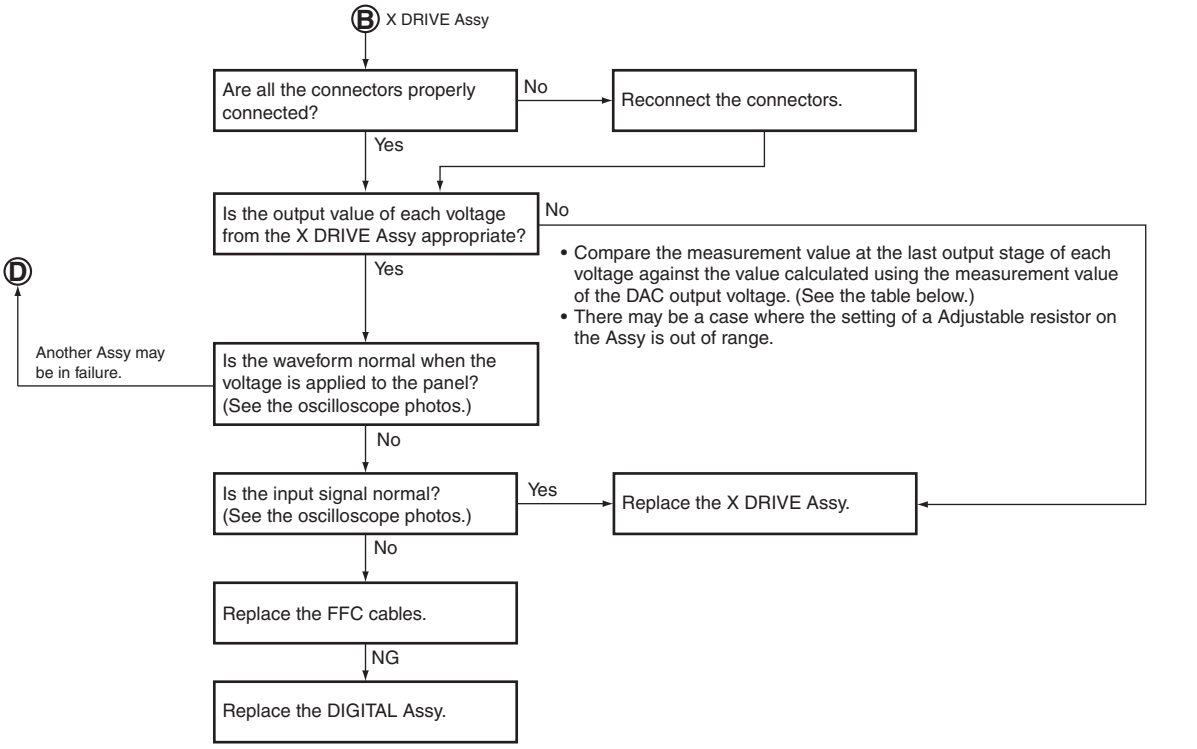
Ⓑ X DRIVE Assy
Are all the connectors properly connected?
No
Reconnect the connectors.
Yes
Is the output value of each voltage from the X DRIVE Assy appropriate?
No
• Compare the measurement value at the last output stage of each voltage against the value calculated using the measurement value of the DAC output voltage. (See the table below.)
• There may be a case where the setting of a Adjustable resistor on the Assy is out of range.
Ⓓ
Yes
Another Assy may be in failure.
Is the waveform normal when the voltage is applied to the panel? (See the oscilloscope photos.)
No
Is the input signal normal? (See the oscilloscope photos.)
Yes
Replace the X DRIVE Assy.
No
Replace the FFC cables.
NG
Replace the DIGITAL Assy.

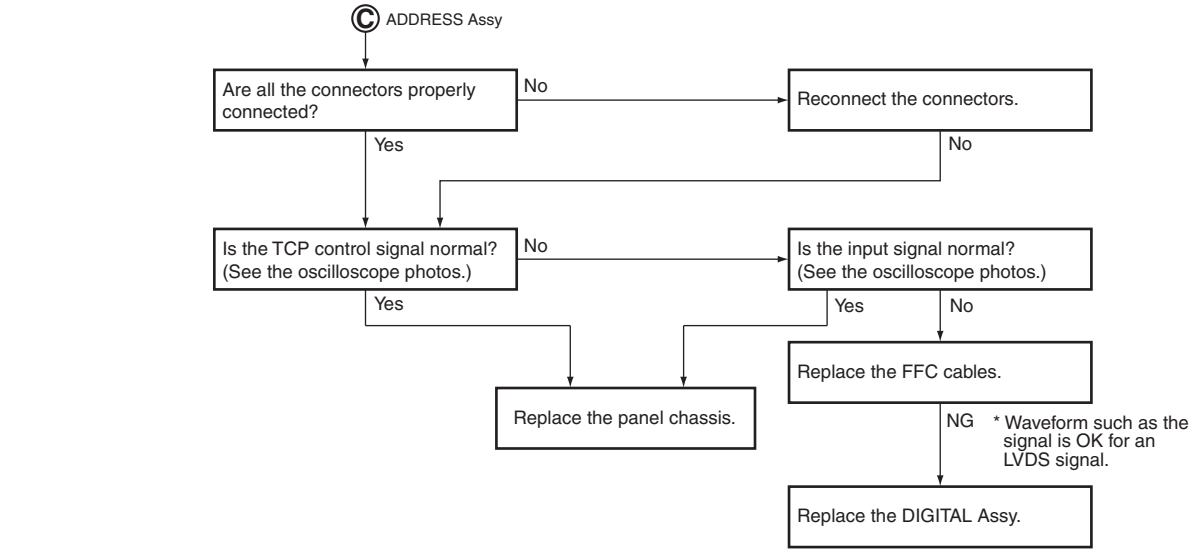
Ⓒ ADDRESS Assy
Are all the connectors properly connected?
No
Reconnect the connectors.
Yes
No
Is the TCP control signal normal? (See the oscilloscope photos.)
No
Is the input signal normal? (See the oscilloscope photos.)
Yes
Yes
No
Replace the FFC cables.
Replace the panel chassis.
NG
* Waveform such as the signal is OK for an LVDS signal.
Replace the DIGITAL Assy.

Assy Name	Voltage to be Checked (V)	Adjustable Range		Measurement Point		Computation Formula for Voltage (Absolute Value)	
		60-inch	50-inch	Output at the Last Stage	DAC Output (*2)	Computation Using DAC Output Voltage (V)	Computation Using Adjustment Value (*4)
Y DRIVE Assy	VSNOFS	040 to 085	101 to 157	CN2404 (*1)	Lower side of R2723 (*3)	VOFS_ADJ × 13.91 + 55.54	VOF value × 0.18 + 9.6
	VYRST	001 to 056	001 to 074	CN2401 (*1)	Upper side of R2621 (*3)	VYPRST_ADJ × 62.495 + 75.2	VRP value × 0.81 + 74.4
	VKNOFS1_2	054 to 107	121 to 164	CN2405 (*1)	Left side of R2754 (*3)	YVKNOFS1_ADJ × 36.85 + 159.3	(V1F value+VYF value-128) × 0.48 + 158.8
	VKNOFS3	065 to 117	107 to 149	CN2403 (*1)	Right side of R2757 (*3)	YVKNOFS3_ADJ × 36.85 + 159.3	(V3F value+VYF value-128) × 0.48 + 158.8
	VKNOFS4	111 to 164	151 to 193	CN2406 (*1)	Right side of R2755 (*3)	YVKNOFS4_ADJ × 36.85 + 159.3	(V4F value+VYF value-128) × 0.48 + 158.8
X DRIVE Assy	XKOFS1	105	085	CN1302 (*1)	K1402 (*1)	XKNOFS1_ADJ × 27.3 + 30	VX1 value × 0.35 + 29.7
	XKOFS2	063	047	CN1301 (*1)	K1401 (*1)	XKNOFS2_ADJ × 25.0 + 69.8	VX2 value × 0.32 + 69.5

(*1): These parts have not been mounted.
(*2): It is recommended to measure the DAC output voltage with the drive off.
(*3): View when the Assy is mounted on the unit and viewed from the rear.
(*4): The value calculated using an adjustment value may be different from the value measured at the last output stage, because various corrections such as temperature correction are not taken into consideration.

Diagrammatic view of the Y DRIVE Assy

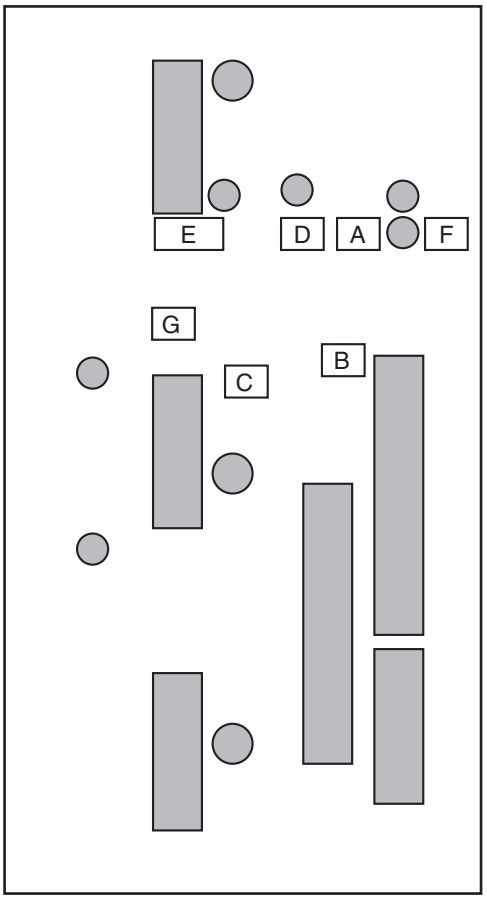

Diagrammatic view of the X DRIVE Assy

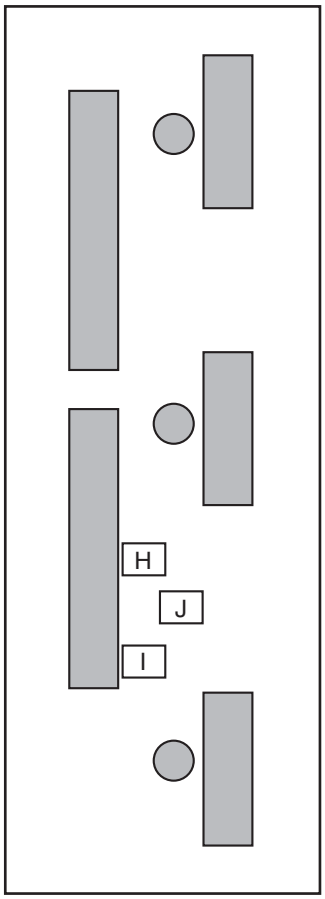

A	R2754,R2755,R2757
B	R2723
C	R2621
D	CN2405
E	CN2403,CN2406
F	CN2404
G	CN2401
H	K1401
I	K1402
J	CN1301,CN1302

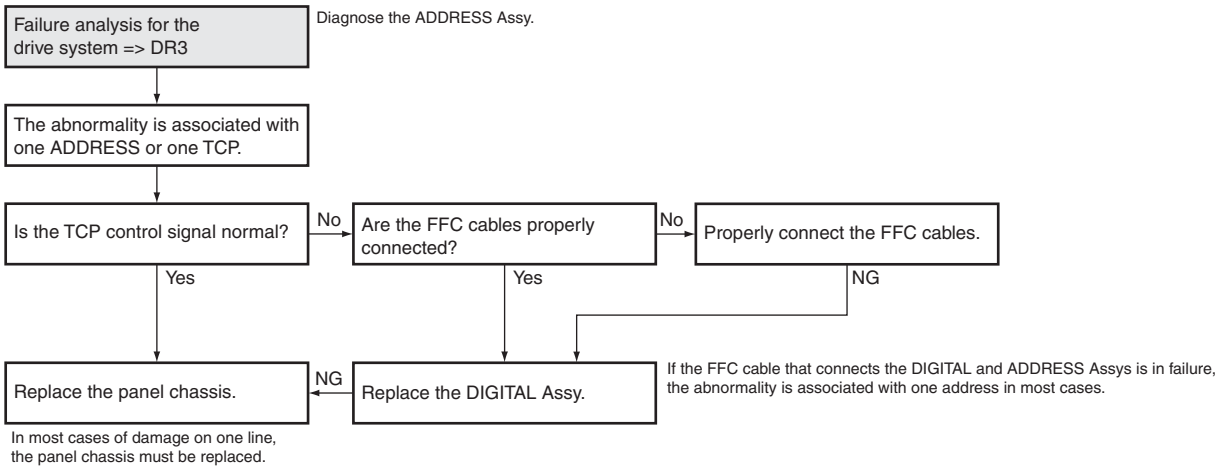

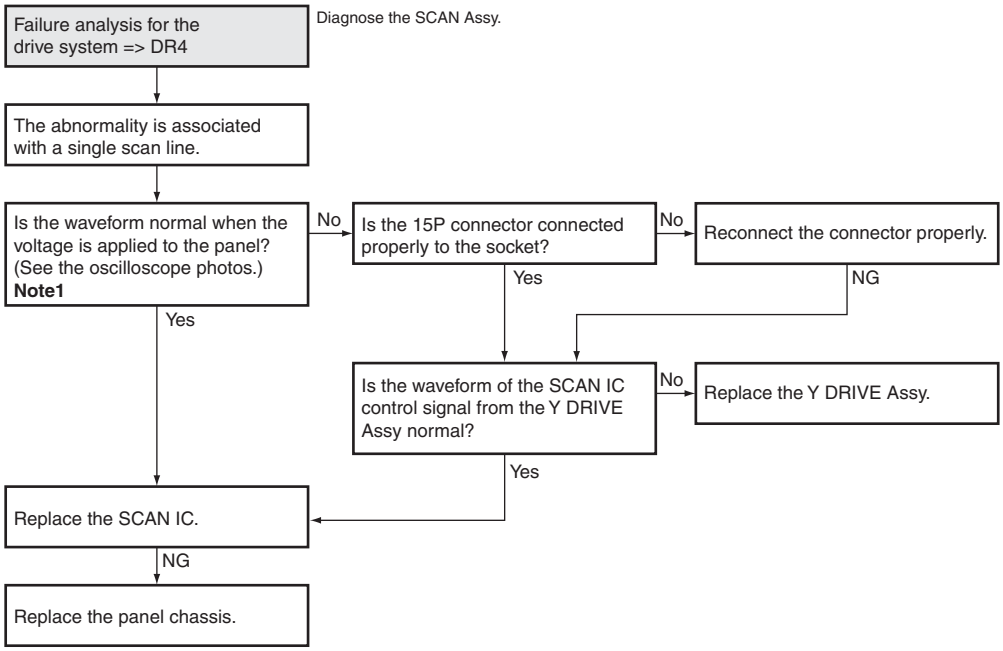

Note 1:
In a case where confirmation of the waveform for a particular line is impossible with an oscilloscope, it is possible to identify a defective line by lighting a particular line, using the following commands: (The SCAN IC outputting each line refers to the table.)
PON
FAY
MKRS01
BSMS01 (Command for reducing phosphor burn-in)
$250000**** (In place of ****, input a figure between 0001 and 1080, which denotes an ordinal number of a particular line.)

With the above commands, a particular line lights. Be careful to light a line for as short a time as possible, to avoid phosphor burn-in.
After a particular line is identified, display an all-white screen to protect the screen from burn-in.

IC No.	Line Number	Object Line
No 1	66	0001 to 0066
No 2	68	0067 to 0134
No 3	68	0135 to 0202
No 4	68	0203 to 0270
No 5	68	0271 to 0338
No 6	68	0339 to 0406
No 7	68	0407 to 0474
No 8	66	0475 to 0540
No 9	66	0541 to 0606
No 10	68	0607 to 0674
No 11	68	0675 to 0742
No 12	68	0743 to 0810
No 13	68	0811 to 0878
No 14	68	0879 to 0946
No 15	68	0947 to 1014
No 16	66	1015 to 1080

[4] DIGITAL ASSY

Flowchart of Failure Analysis for The DIGITAL Assy

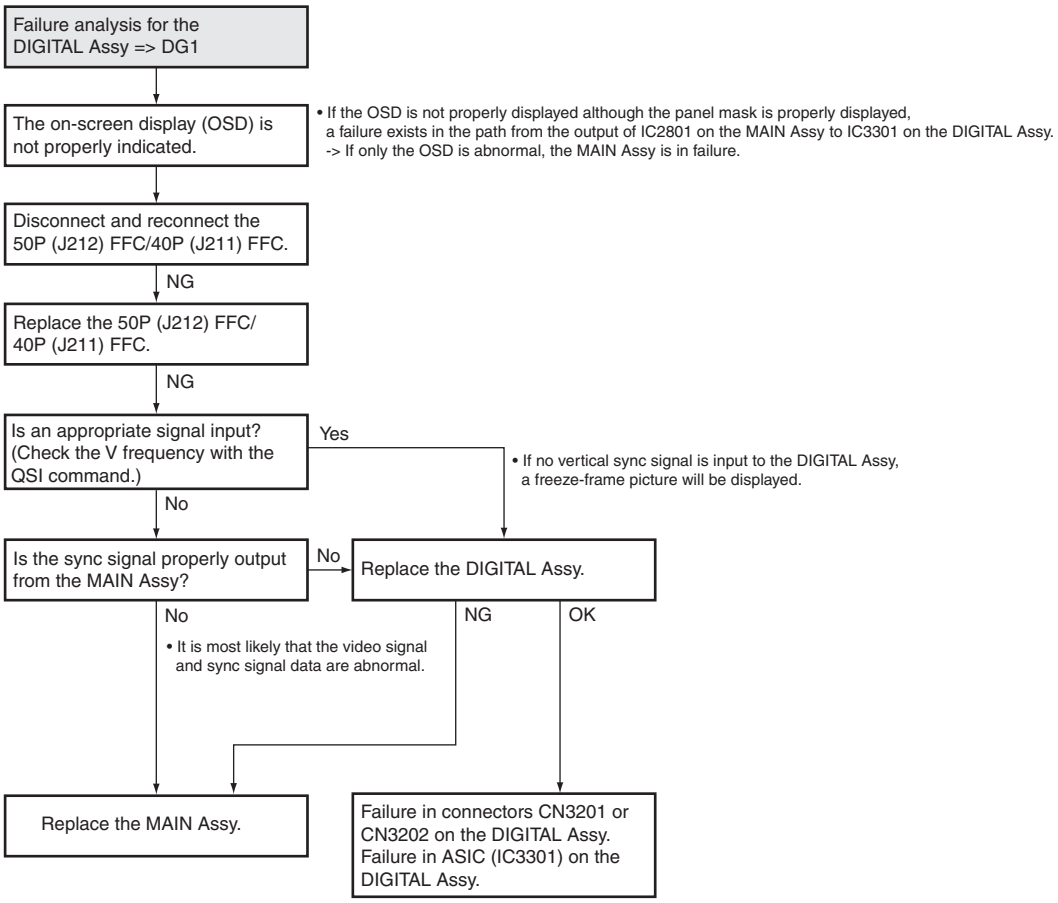

[5] MAIN ASSY

Flowchart of Failure Analysis for The MAIN Assy

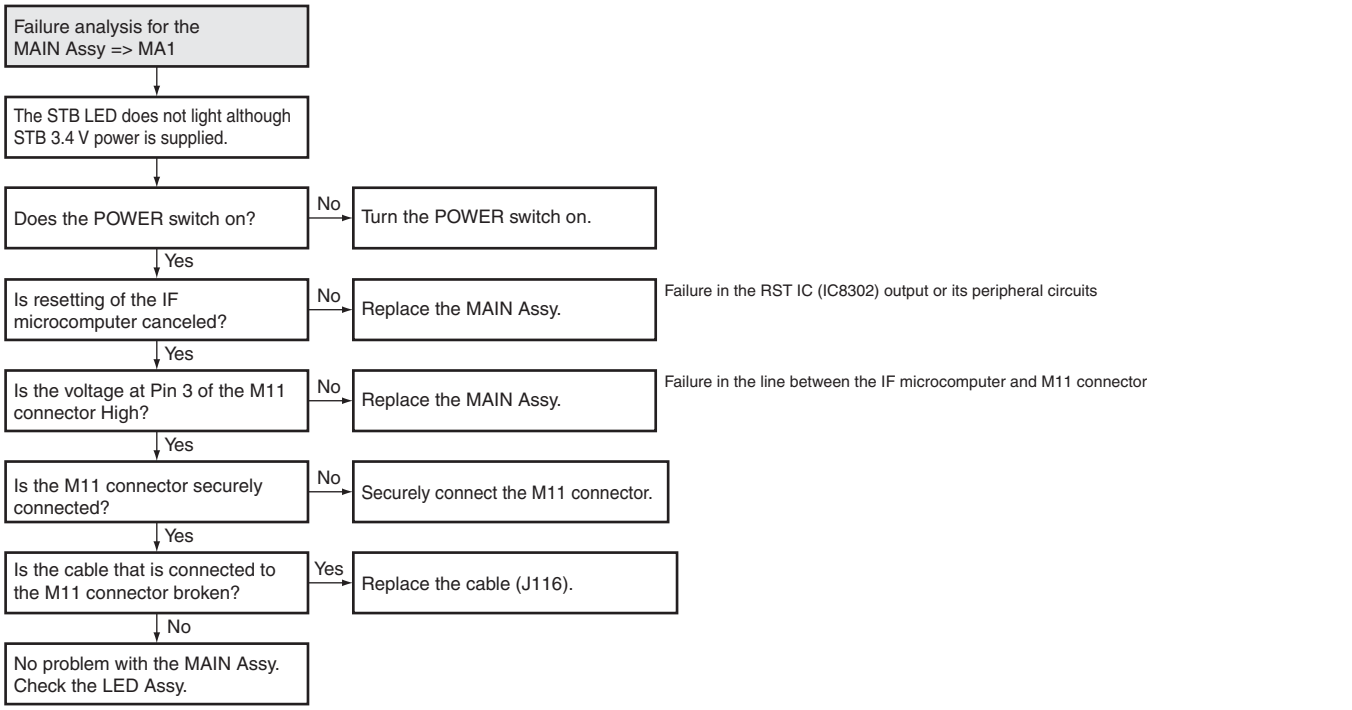

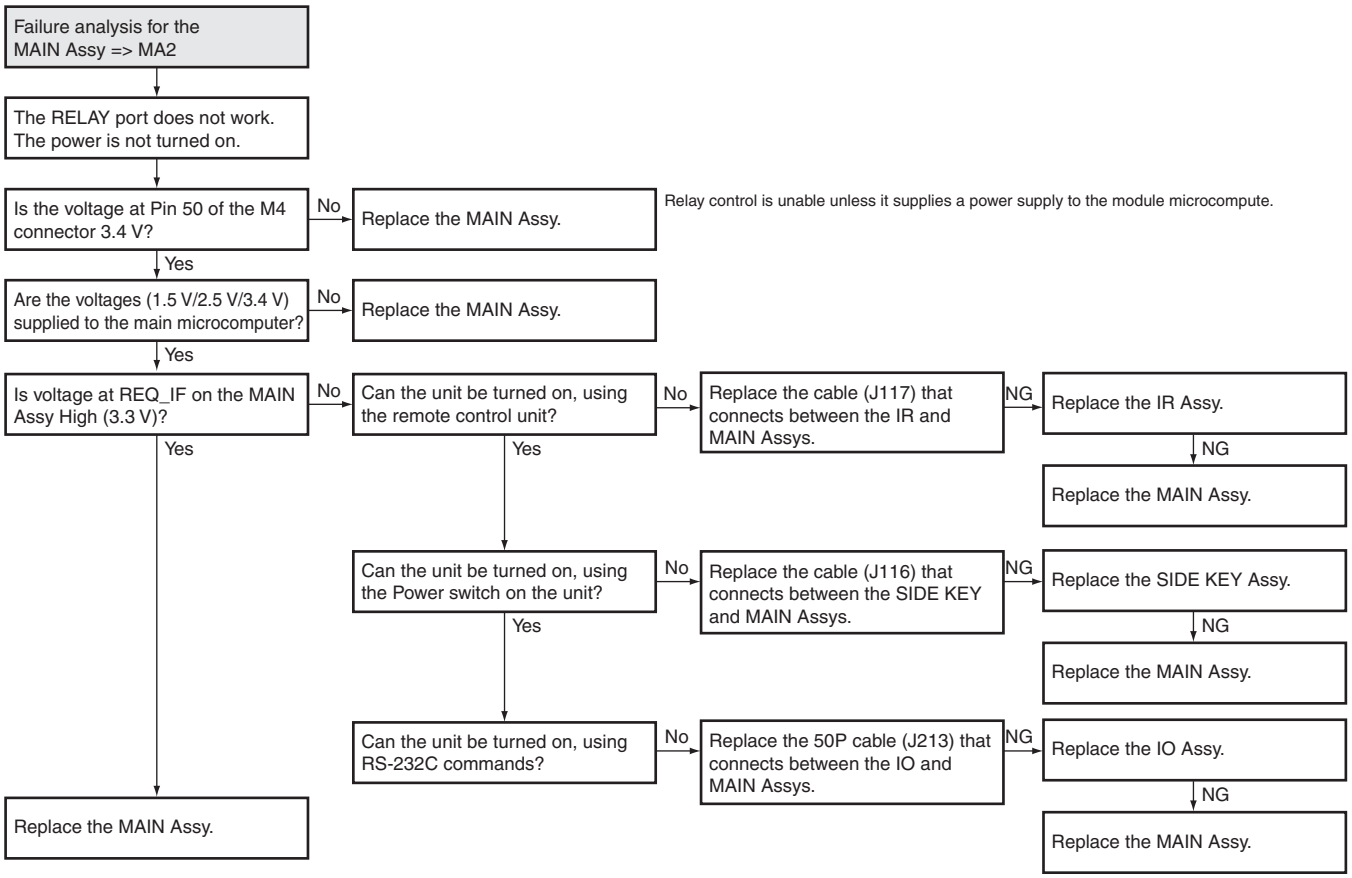

Flowchart of Failure Analysis for The Video System

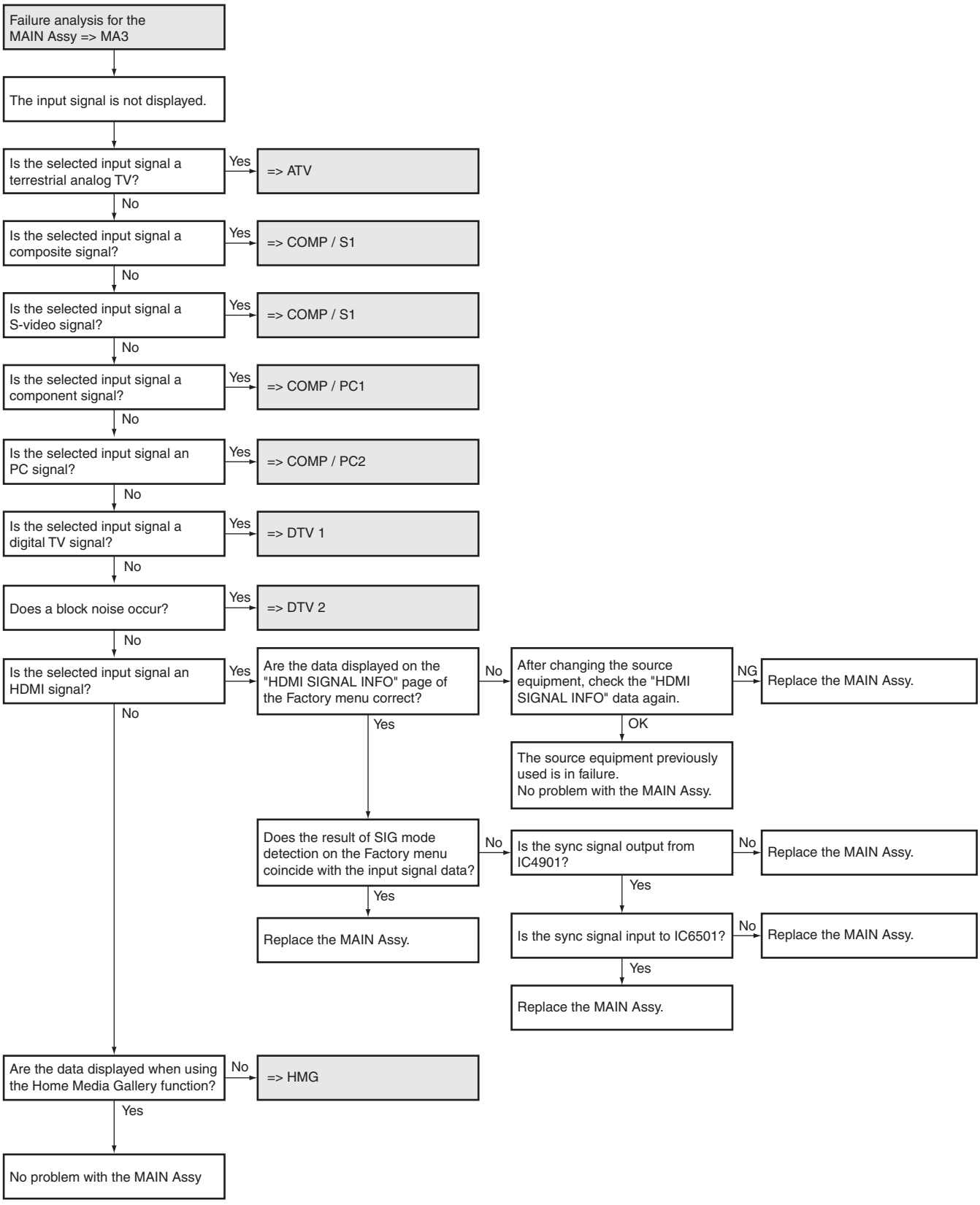

[6] VIDEO SYSTEM

Flowchart of Failure Analysis for The Video System

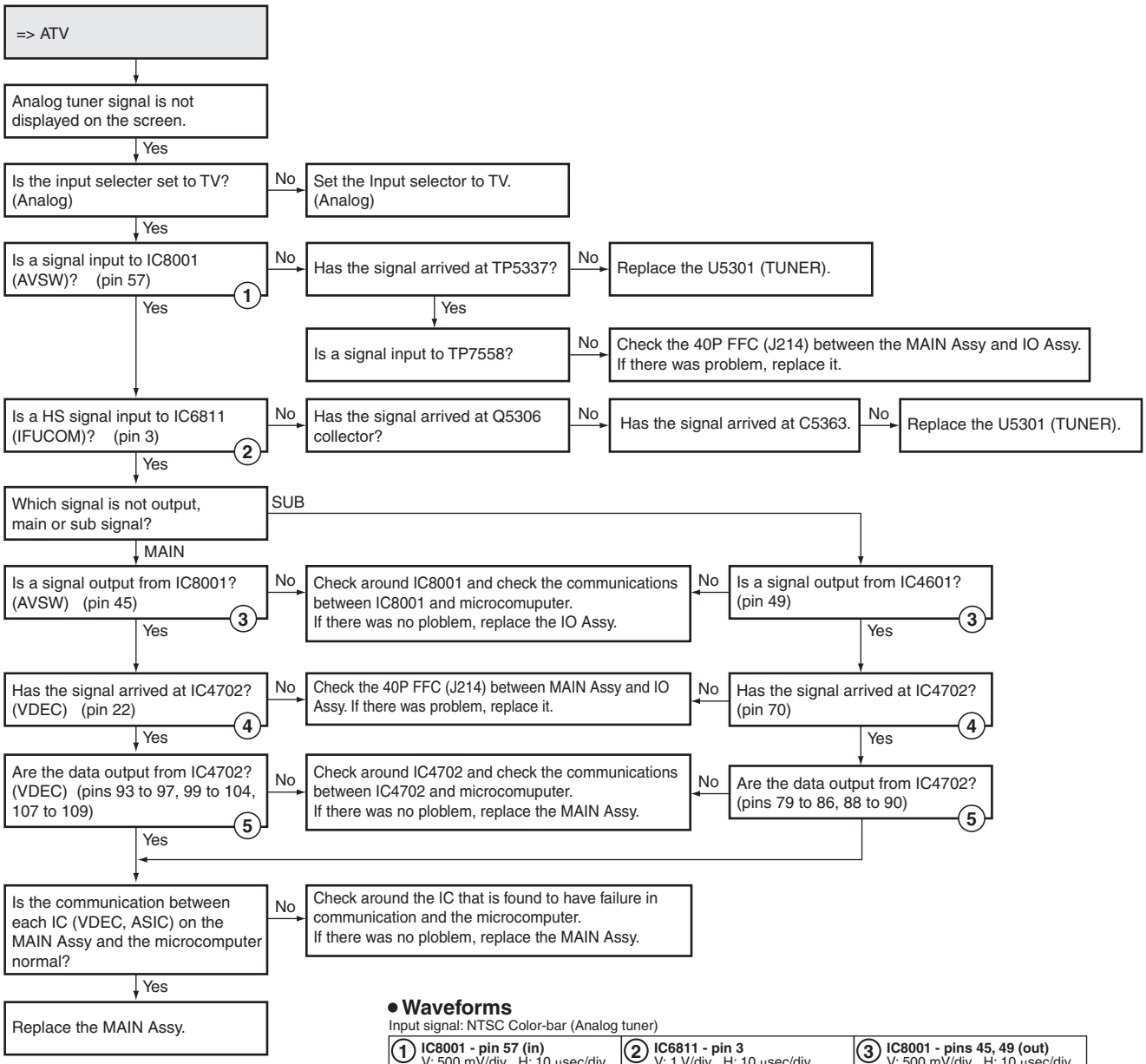

● Waveforms

Input signal: NTSC Color-bar (Analog tuner)

① **IC8001 - pin 57 (in)** V: 500 mV/div H: 10 µsec/div	② **IC6811 - pin 3** V: 1 V/div H: 10 µsec/div	③ **IC8001 - pins 45, 49 (out)** V: 500 mV/div H: 10 µsec/div
④ **IC4702 - pins 22, 70** V: 500 mV/div H: 10 µsec/div	⑤ **IC4702 (out)** V: 1 V/div H: 2 µsec/div	

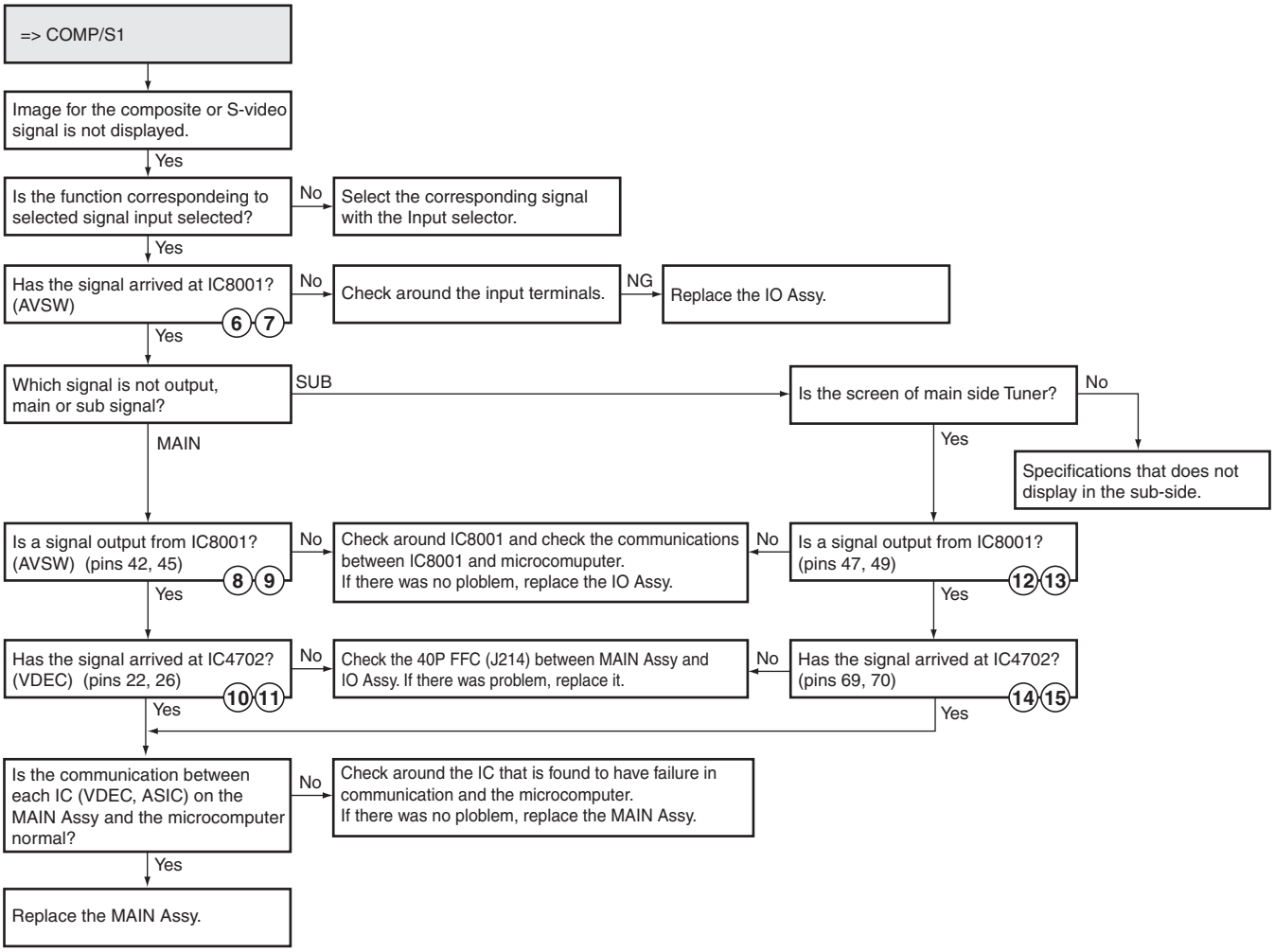

● Waveforms

Input signal: NTSC Color-bar (S termial)

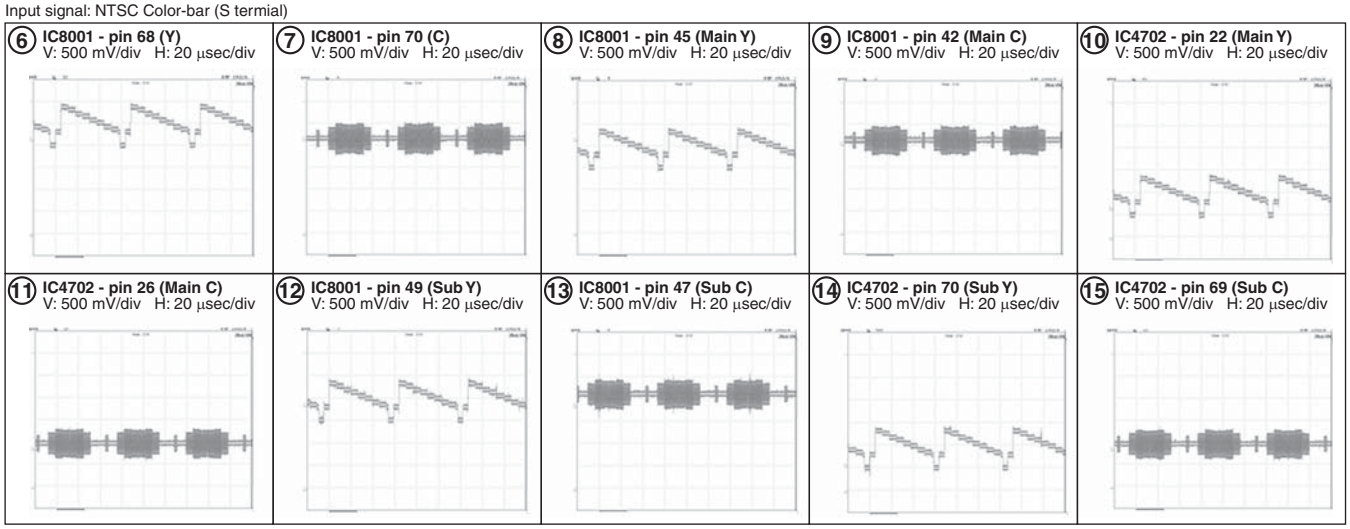

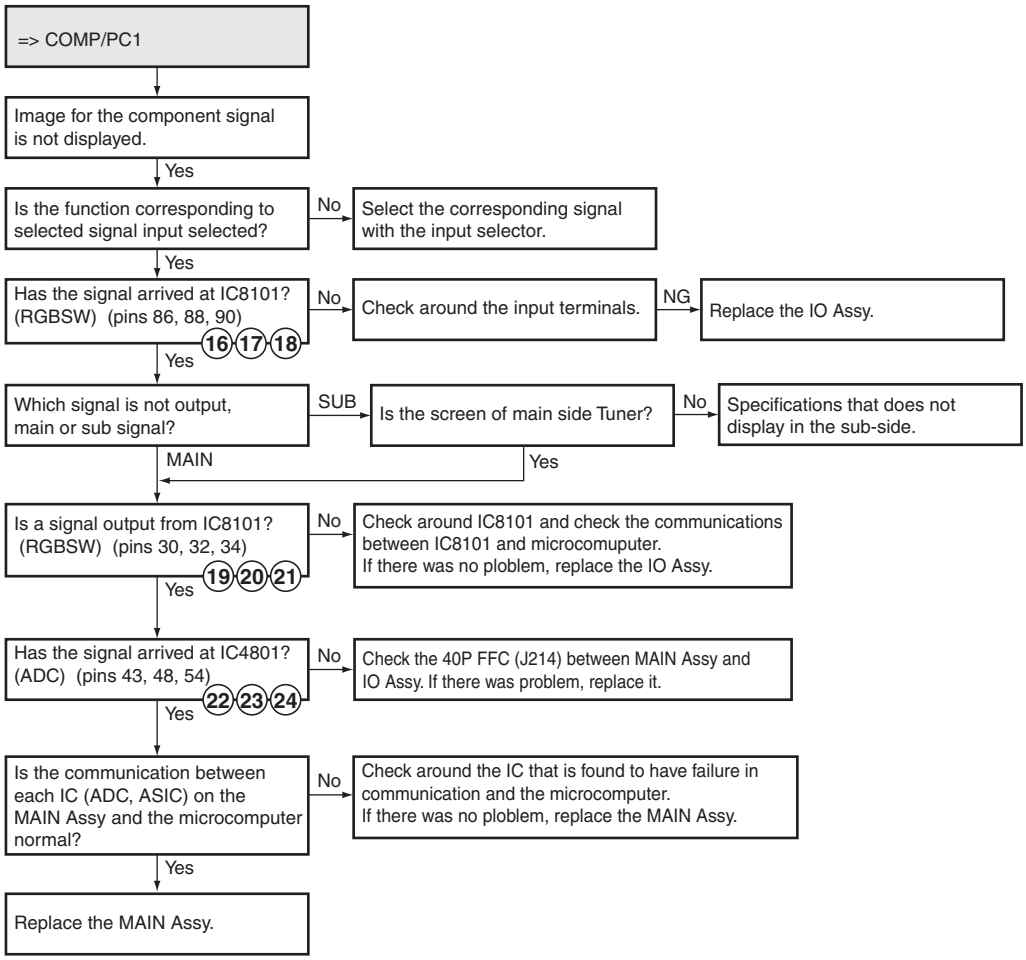

● Waveforms

Input signal: Color-bar (Component 720p/50 Hz)

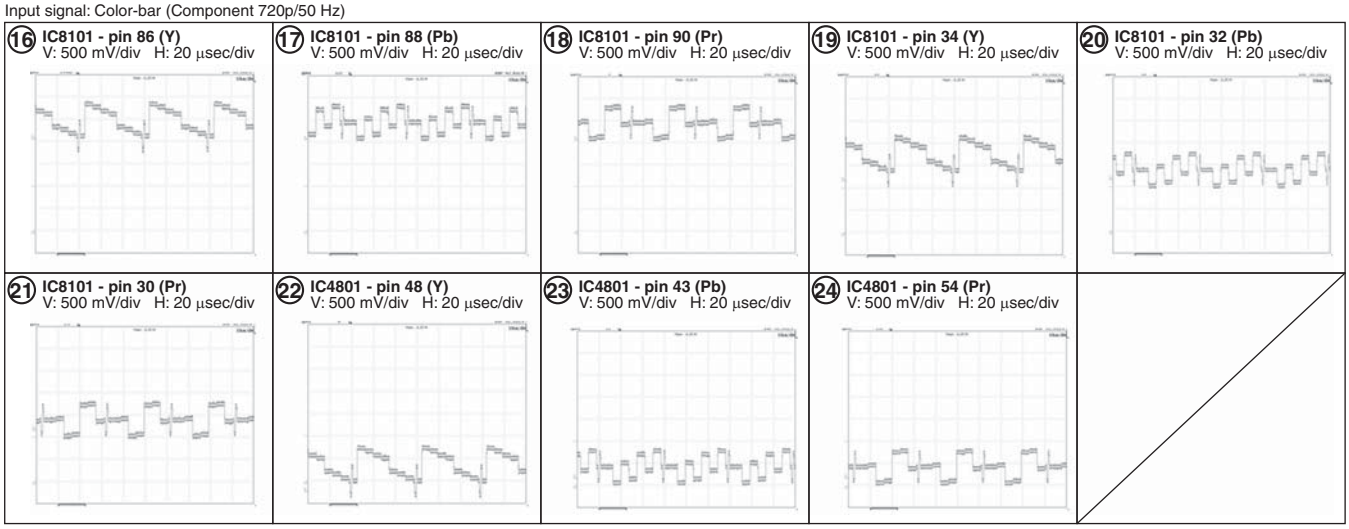

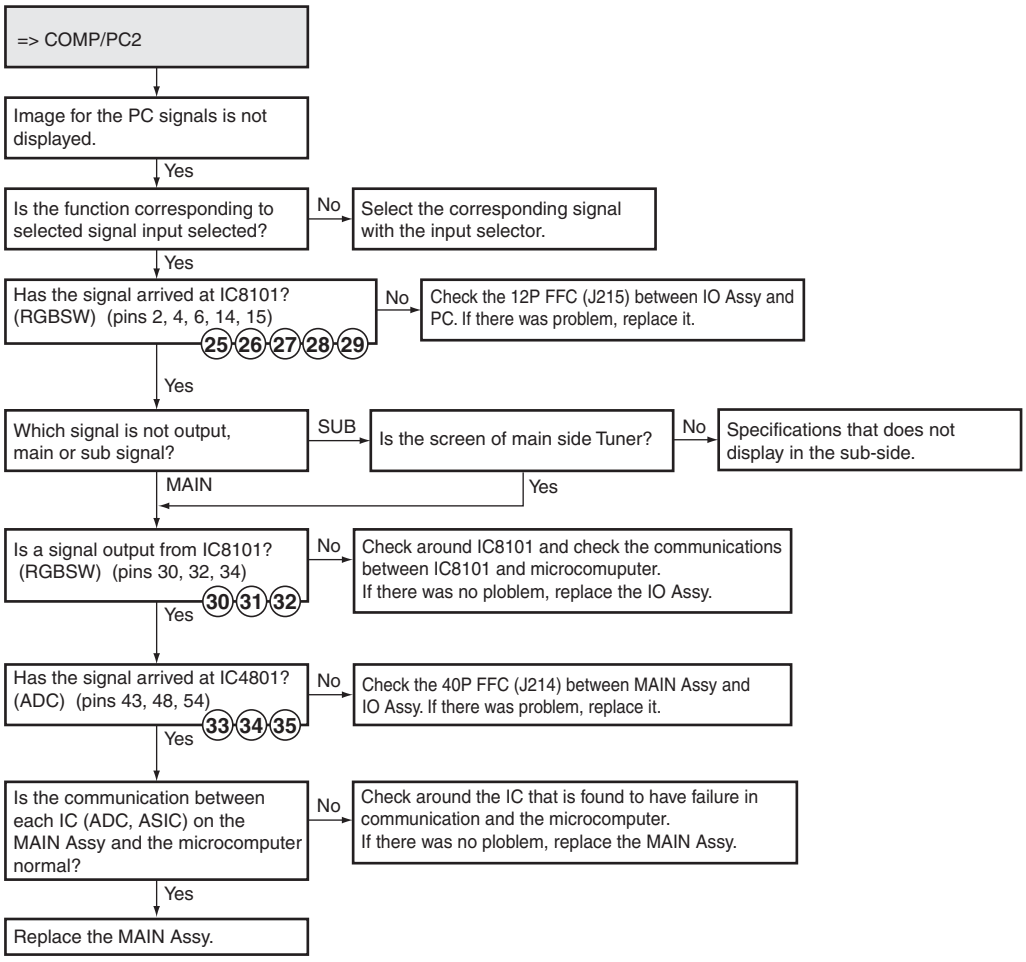

● Waveforms

Input signal: Color-bar (PC SXGA/60 Hz)

25 IC8101 - pin 2 (G in)
V: 500 mV/div H: 10 μsec/div

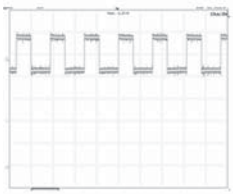

26 IC8101 - pin 4 (B in)
V: 500 mV/div H: 10 μsec/div

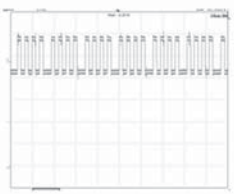

27 IC8101 - pin 6 (R in)
V: 500 mV/div H: 10 μsec/div

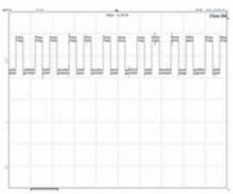

28 IC8101 - pin 14 (HD in)
V: 1 V/div H: 10 μsec/div
(polarity is no care)

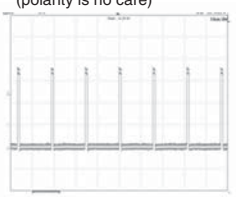

29 IC8101 - pin 15 (VD in)
V: 1 V/div H: 2 msec/div
(polarity is no care)

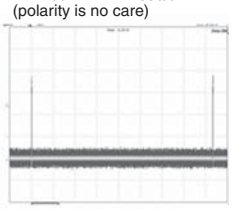

30 IC8101 - pin 34 (G out)
V: 500 mV/div H: 10 μsec/div

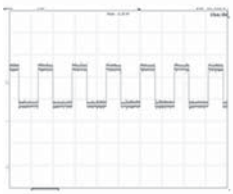

31 IC8101 - pin 32 (B out)
V: 500 mV/div H: 10 μsec/div

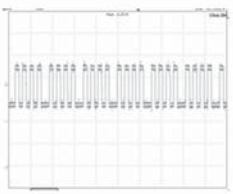

32 IC8101 - pin 30 (R out)
V: 500 mV/div H: 10 μsec/div

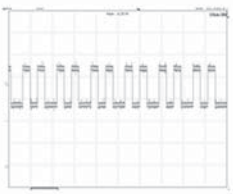

33 IC4801 - pin 48 (G)
V: 500 mV/div H: 10 μsec/div

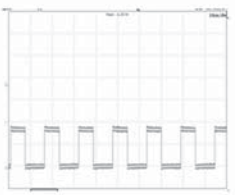

34 IC4801 - pin 43 (B)
V: 500 mV/div H: 10 μsec/div

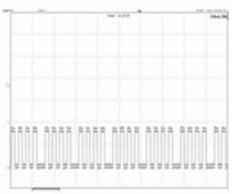

35 IC4801 - pin 54 (R)
V: 500 mV/div H: 10 μsec/div

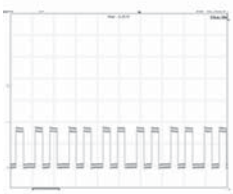

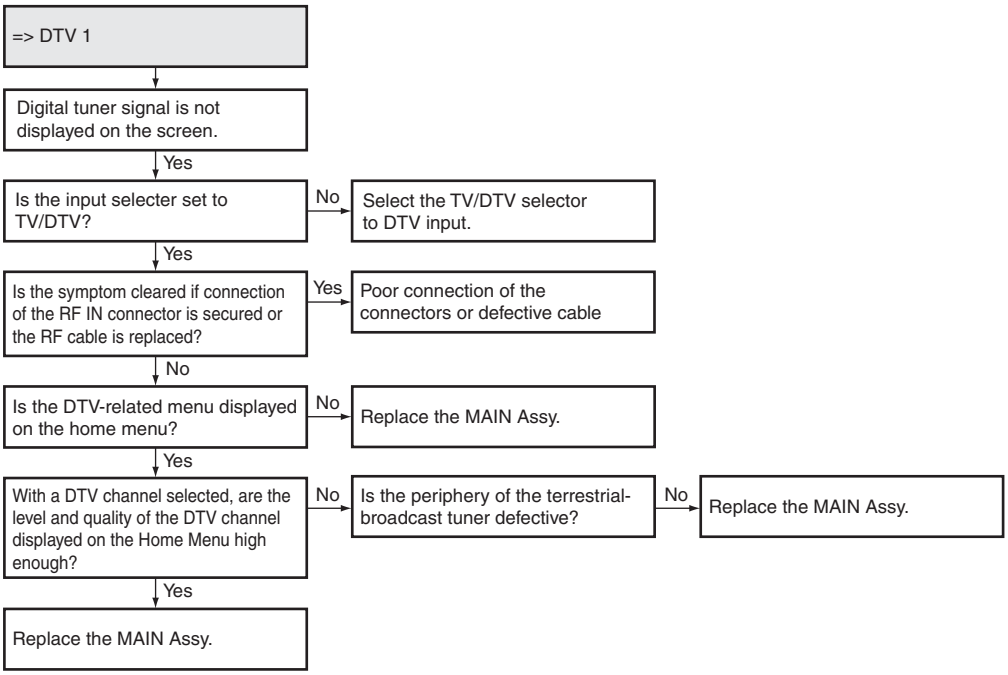
=> DTV 1
Digital tuner signal is not displayed on the screen.
Yes
Is the input selecter set to TV/DTV?
No
Select the TV/DTV selector to DTV input.
Yes
Is the symptom cleared if connection of the RF IN connector is secured or the RF cable is replaced?
Yes
Poor connection of the connectors or defective cable
No
Is the DTV-related menu displayed on the home menu?
No
Replace the MAIN Assy.
Yes
With a DTV channel selected, are the level and quality of the DTV channel displayed on the Home Menu high enough?
No
Is the periphery of the terrestrial-broadcast tuner defective?
No
Replace the MAIN Assy.
Yes
Replace the MAIN Assy.

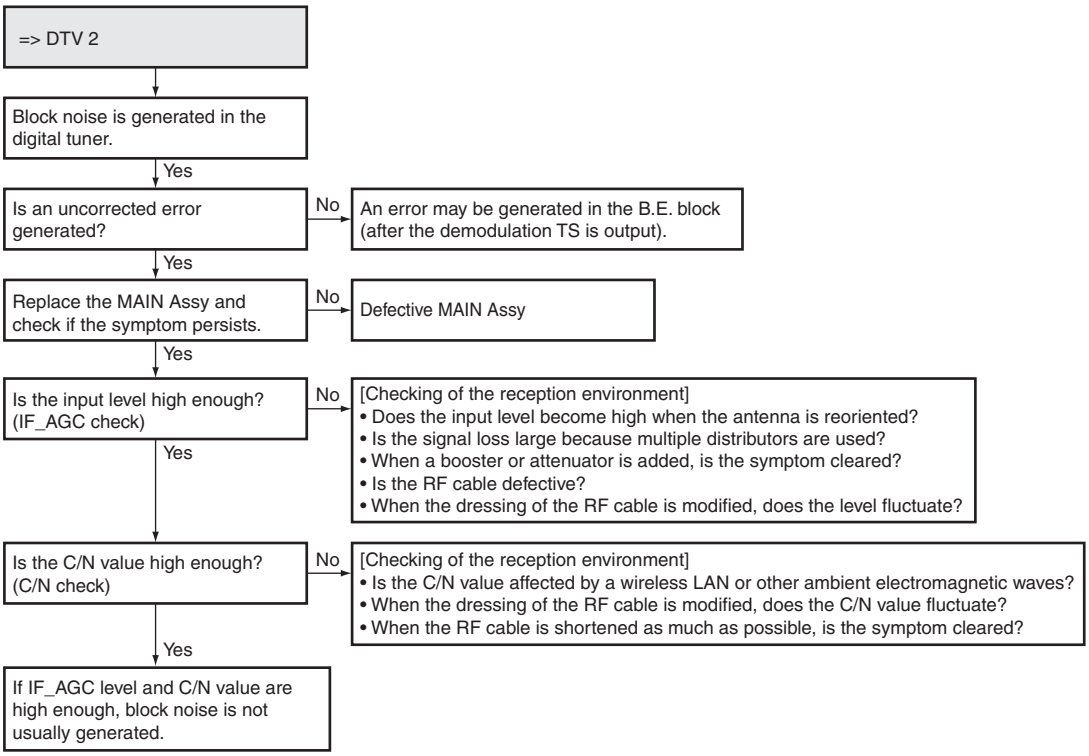
=> DTV 2
Block noise is generated in the digital tuner.
Yes
Is an uncorrected error generated?
No
An error may be generated in the B.E. block (after the demodulation TS is output).
Yes
Replace the MAIN Assy and check if the symptom persists.
No
Defective MAIN Assy
Yes
Is the input level high enough? (IF_AGC check)
No
[Checking of the reception environment]
• Does the input level become high when the antenna is reoriented?
• Is the signal loss large because multiple distributors are used?
• When a booster or attenuator is added, is the symptom cleared?
• Is the RF cable defective?
• When the dressing of the RF cable is modified, does the level fluctuate?
Yes
Is the C/N value high enough? (C/N check)
No
[Checking of the reception environment]
• Is the C/N value affected by a wireless LAN or other ambient electromagnetic waves?
• When the dressing of the RF cable is modified, does the C/N value fluctuate?
• When the RF cable is shortened as much as possible, is the symptom cleared?
Yes
If IF_AGC level and C/N value are high enough, block noise is not usually generated.

■ Details on how to confirm the factory DTV tuning status

Generation of block noise

↓

Check the modulation method with which block noise is generated.

QAM256	QAM64	VSB8

Is generation of noise dependent on the modulation method?

↓

Check the frequency at which block noise is generated.

All channels	Only at a certain frequency	Not generated

Is generation of noise dependent on the frequency?

↓

Depending on how block noise is generated, obtain the DTV tuning status.
(Two-page screen data, as indicated on the right)

Obtain the DTV tuning status for QAM256 and QAM64, regardless of whether noise is generated or not. With a terrestrial- broadcast wave, obtain the status for VSB8 only. Then, if noise is generated at a certain frequency but not generated at another frequency even though the modulation method is the same, obtain the statuses for both frequencies.
Timing of obtaining a status is 60 sec after the beginning of measurement.
Resetting of a measurement value can be done with the "⬅" or "➡" key.

↓

How to check the frequency and modulation method and how to obtain the status

- Is generation of block noise dependent on the frequency/modulation method?
  → Check the "Frequency" and "Modulation" items.
- Is the input level high enough? → Check the "IF AGC" item.
- Is the signal quality high? → Check the "C/N," "Error," and "BER" items.

↓

Screen example of DTV Tuning Status (Two-pages)

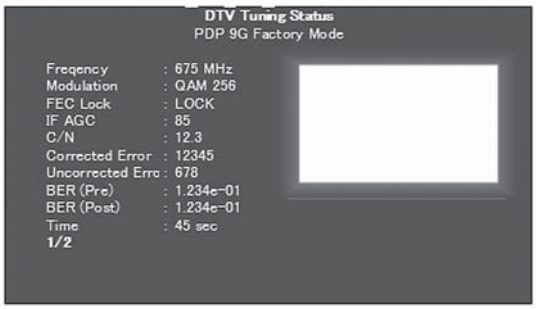

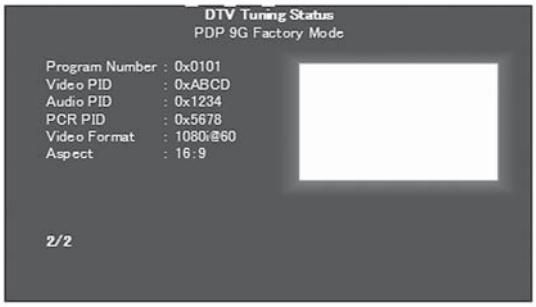

Factory — Press the Factory key.

INITIALIZE — Press the Mute key three times.

DTB SERVICE MODE — Press the "⬇" key twice then the Enter key.

Digital Tuner Service Menu — Press the "➡" key to select YES for MODE SHIFT then hold the Enter key pressed for several seconds.

Digital — Select Digital from the menu then press the Enter key.

DTV Tuning Status — Select DTV Tuning Status from the menu then press the Enter key.

Frequency	Check the frequency.	Is block noise generated at a particular frequency or on all channels? If only at a particular frequency, a wireless LAN or another ambient electromagnetic disturbing wave, such as a terrestrial-broadcast wave, may disturb the reception. If on all channels, the Assy may be defective. → Replace the Assy and check the status to see if the symptom is cleared.
Modulation	Check the modulation method.	With a cable modem, is block noise generated with QAM256 or QAM64 or both? If noise is generated with either of them, the signal quality of the transmitting device may be low. If noise is generated only with QAM256, the reception level or the C/N value may be low. If noise is generated with VSB8, multiple paths may be the cause.
FEC LOCK	Check the status of the demodulation IC.	Check if LOCK is indicated. Even if block noise is generated, LOCK is indicated if a picture is displayed.
IF AGC	Check the IF AGC voltage.	Is the IF AGC voltage level high enough? The following table provides an indication of the level. QAM256 QAM64 VSB8 less than 50 less than 55 less than 60 If the levels fall into the above ranges, usually noise is not generated (use the above ranges only as a guide. They vary depending on the frequency). If noise is generated even though the signal level is sufficient, ambient electromagnetic waves or multiple paths may be the cause. If the levels of all channels are low, the level of signal input to the ANT connector may be low. Check the input signal level with a spectrum analyzer.
C/N	Check the C/N value.	Is the C/N value high enough? The following table provides an indication of the level. QAM256 QAM64 VSB8 more than 30 more than 25 more than 18 If the level falls into the above ranges, usually noise is not generated (use the above ranges only as a guide. They vary depending on the frequency).
Corrected Error	Check the count of a PreFEC error.	Was a PreFEC error actually generated? QAM256 QAM64 VSB8 Indication - - -
Uncorrected Error	Check the count of a PostFEC error.	Was a PostFEC error actually generated? The following table provides an indication of the level. QAM256 QAM64 VSB8 0 0 0 If the level falls into the above ranges, usually noise is not generated. If noise is generated even though the error count is zero, an error may be generated at the B.E. block (after the demodulation TS is output).
BER(Pre)	Check BER of a PreFEC error.	Was a PreFEC error actually generated? The following table provides an indication of the level. QAM256 QAM64 VSB8 less than 1.000e-06 less than 1.000e-06 less than 1.000e-04 If the level falls into the above ranges, usually noise is not generated (use the above ranges only as a guide. They vary depending on the frequency).
BER(Post)	Check BER of a PostFEC error.	Was a PostFEC error actually generated? The following table provides an indication of the level. QAM256 QAM64 VSB8 0.000e + 00 0.000e + 00 0.000e + 00 If the level falls into the above ranges, usually noise is not generated (use the above ranges only as a guide. They vary depending on the frequency). If noise is generated even though the value is in the range of 0.0E-00, an error may be generated at the B.E. block (after the demodulation TS is output).
Time	Measurement time	Accumulated measurement time

[7] HOME MEDIA GALLERY

Flowchart of Failure Analysis for The HMG

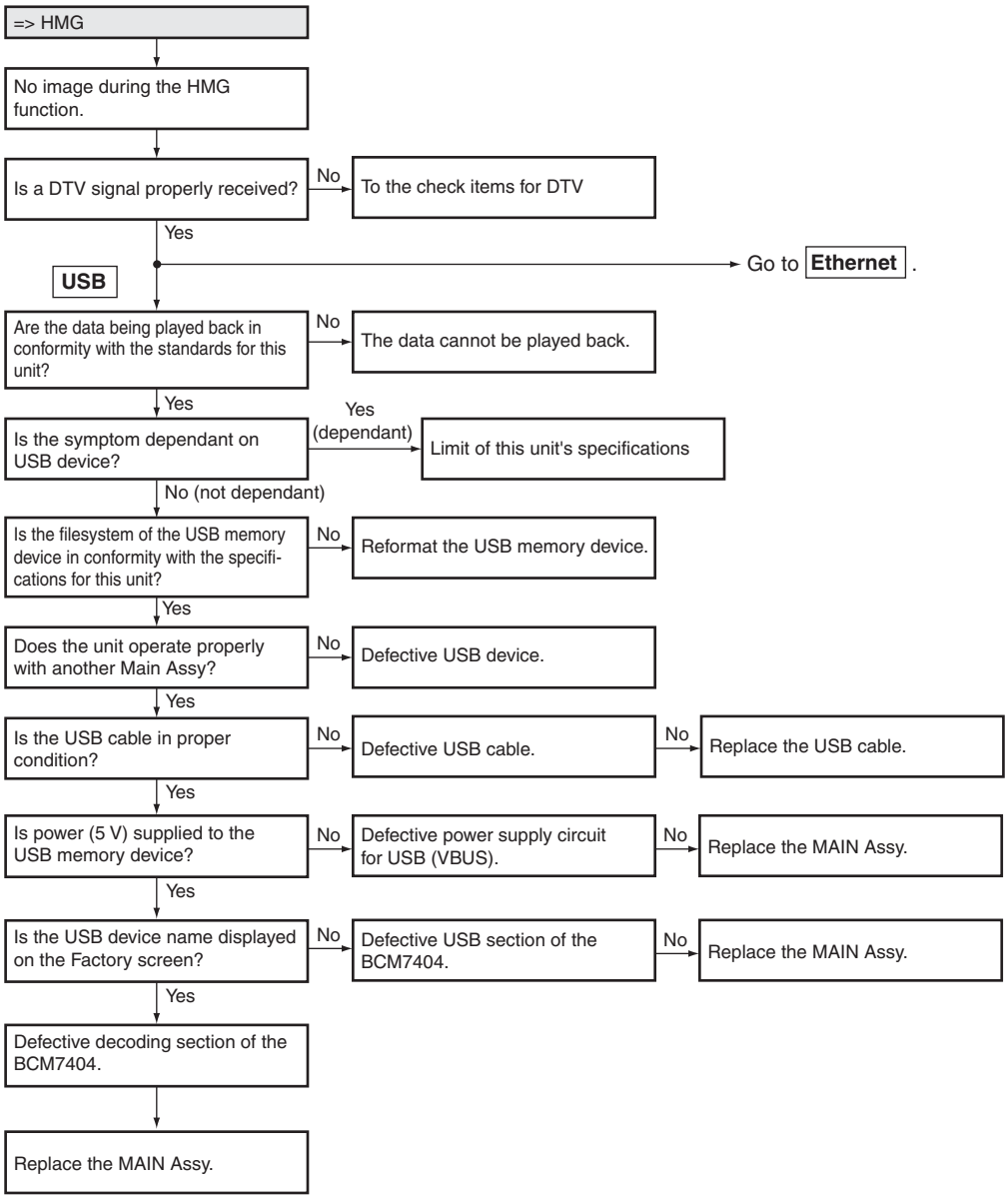

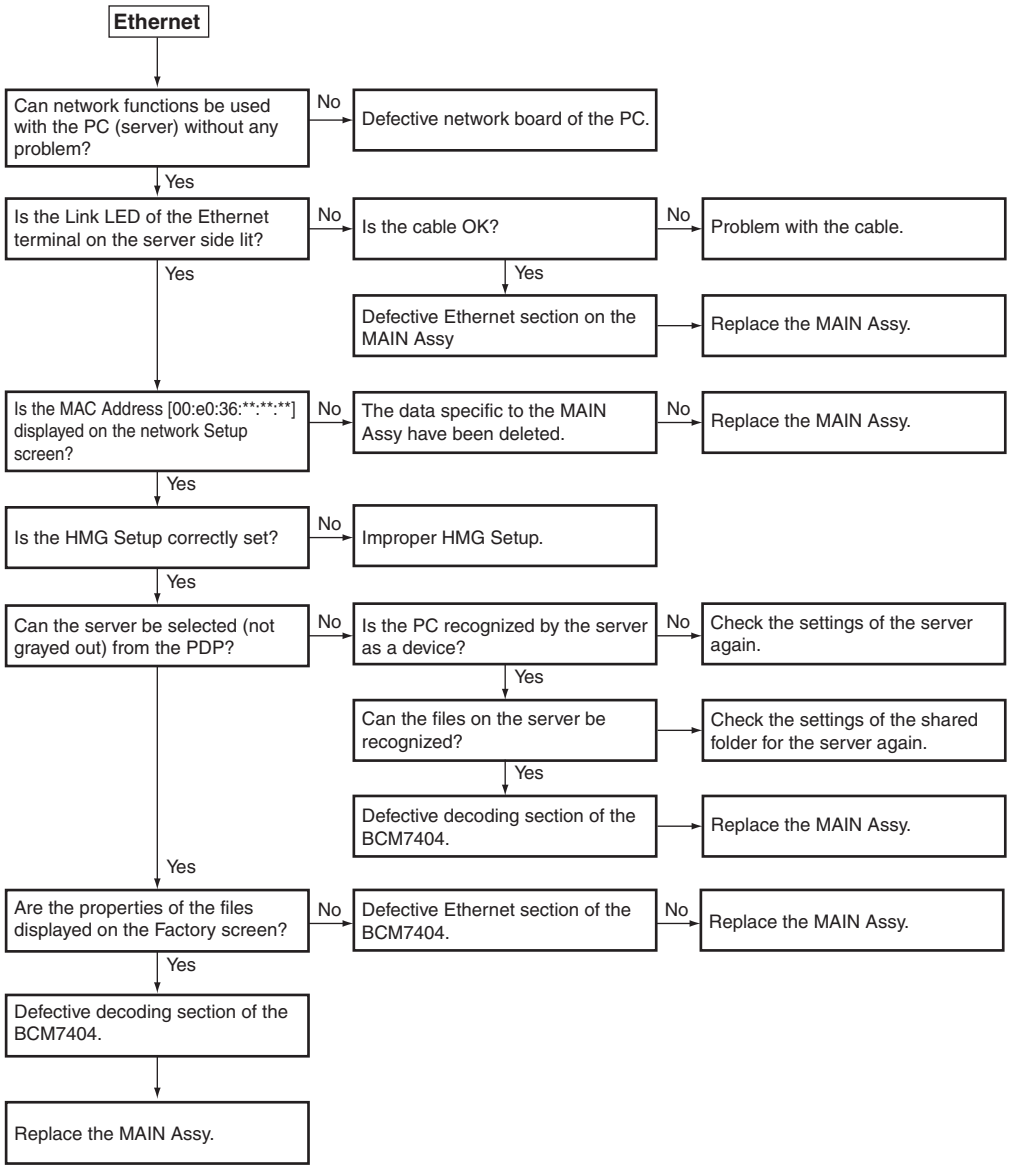

[HMG] How to enter DTB Service menu

Note: Use the remote control unit that supports Factory mode, because the DTB Service menu is accessible from Factory mode.

Step 1: Press the Factory key on the remote control unit to display the INFORMATION screen of Factory mode.
Step 2: Press the Mute key on the remote control unit 3 times to display the INITIALIZE screen.
Step 3: Press the ⬇ key on the remote control unit twice to display the “DTB SERVICE MODE (+)” indication at the bottom of the screen.
Step 4: Press the ENTER/SET key on the remote control unit to display the “MODE SHIFT <=>: No” indication at the bottom of the screen.
Step 5: Press the ⬅ or ➡ key on the remote control unit until the “MODE SHIFT <=>: YES” indication is displayed at the bottom of the screen.
Step 6: Press and hold the ENTER/SET key on the remote control unit pressed for 5 seconds or more to activate DTB Service menu.

The Home Media Gallery (HMG) Service menu is indicated below:

Top page of DTB Service menu

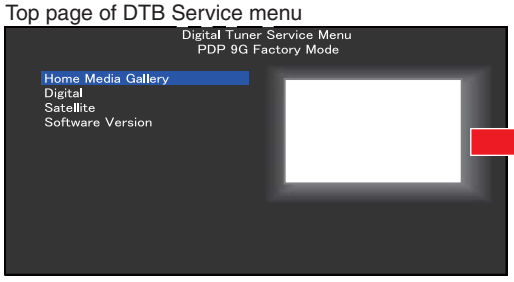

Home Media Gallery Service menu

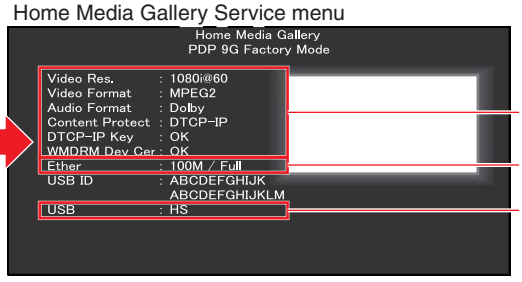

[8] AUDIO SYSTEM

Flowchart of Failure Analysis for The Audio System

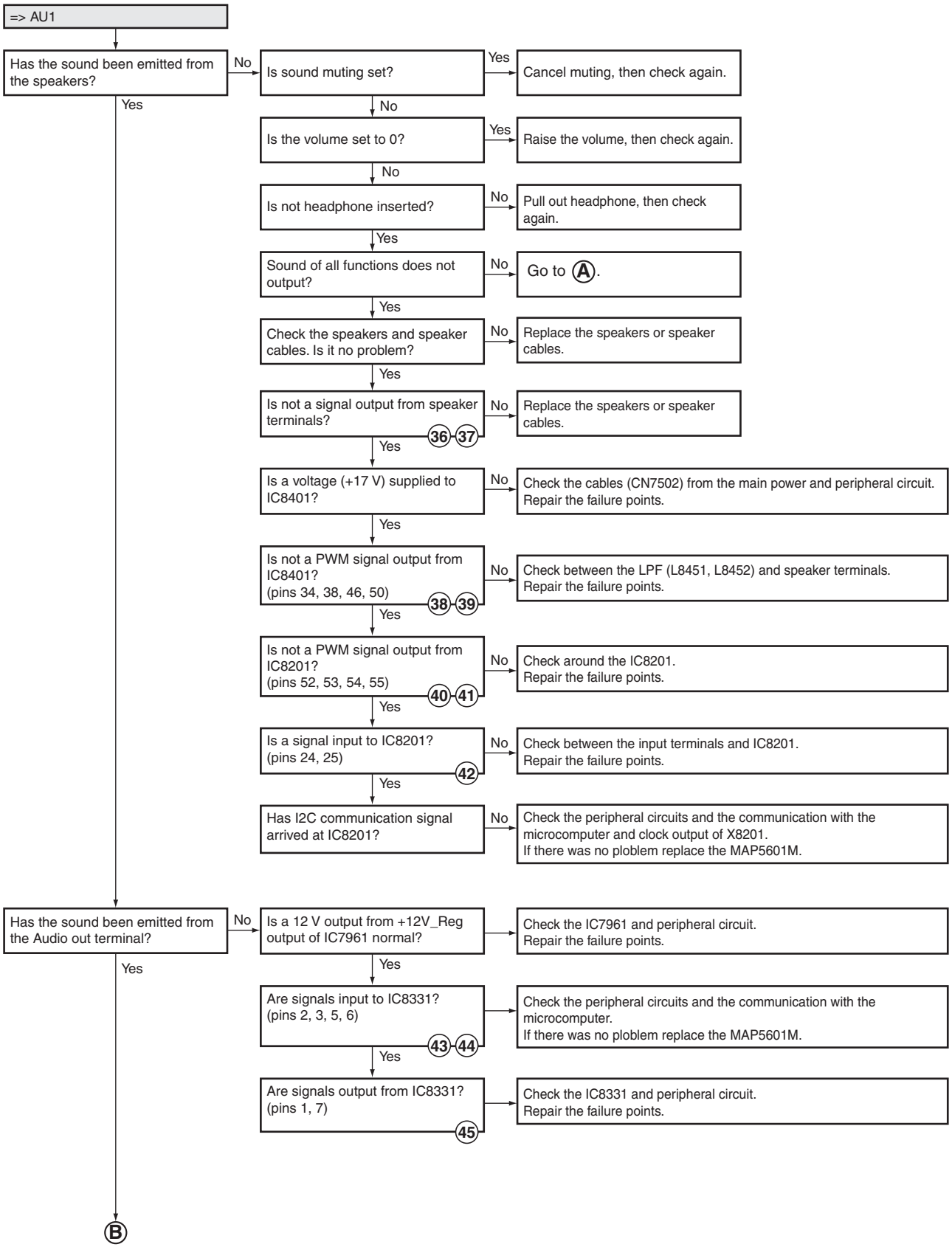

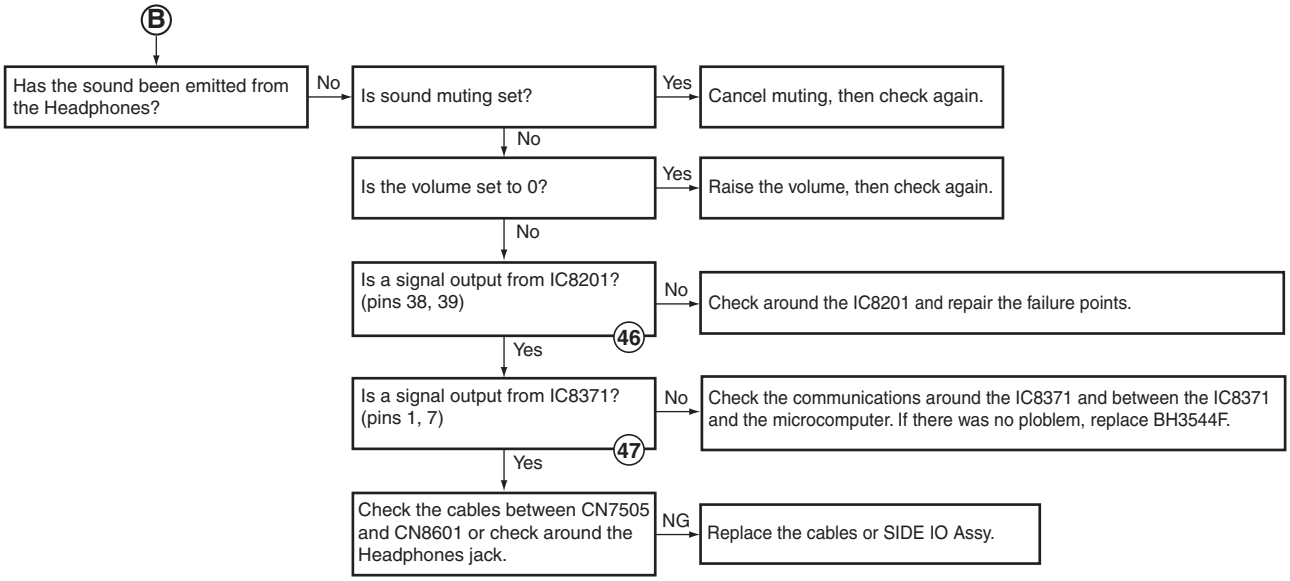

● Waveforms

Input signal: L/R 1 kHz, 0.5 Vrms (VOL 30)

36 JA8551 - pins 1, 2
V: 2 V/div H: 1 mS/div

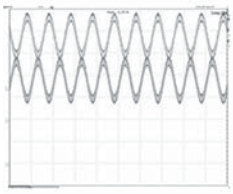

37 JA8551 - pins 3, 4
V: 2 V/div H: 1 mS/div

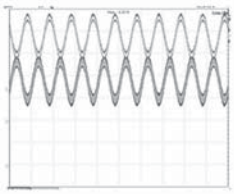

38 IC8401 - pins 34, 38
V: 10 V/div H: 5 μS/div

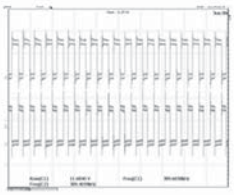

39 IC8401 - pins 46, 50
V: 10 V/div H: 5 μS/div

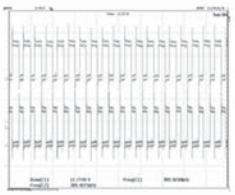

40 IC8201 - pins 52, 53
V: 2 V/div H: 5 μS/div

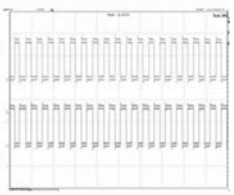

41 IC8201 - pins 54, 55
V: 2 V/div H: 5 μS/div

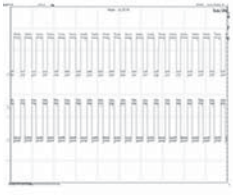

42 IC8201 - pins 24, 25
V: 2 V/div H: 1 mS/div

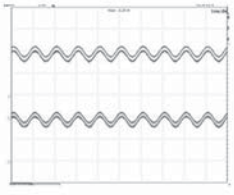

43 IC8331 - pins 2, 3
V: 2 V/div H: 1 mS/div

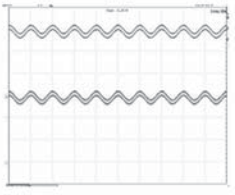

44 IC8331 - pins 5, 6
V: 2 V/div H: 1 mS/div

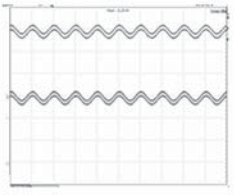

45 IC8331 - pin 17
V: 2 V/div H: 1 mS/div

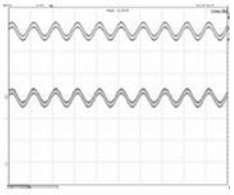

46 IC8201 - pins 38, 39
V: 1 V/div H: 1 mS/div

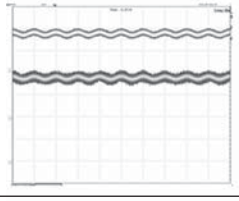

47 IC8271 - pins 1, 7
V: 1 V/div H: 1 mS/div

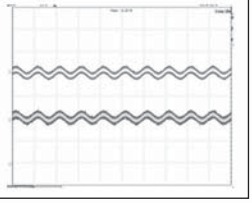

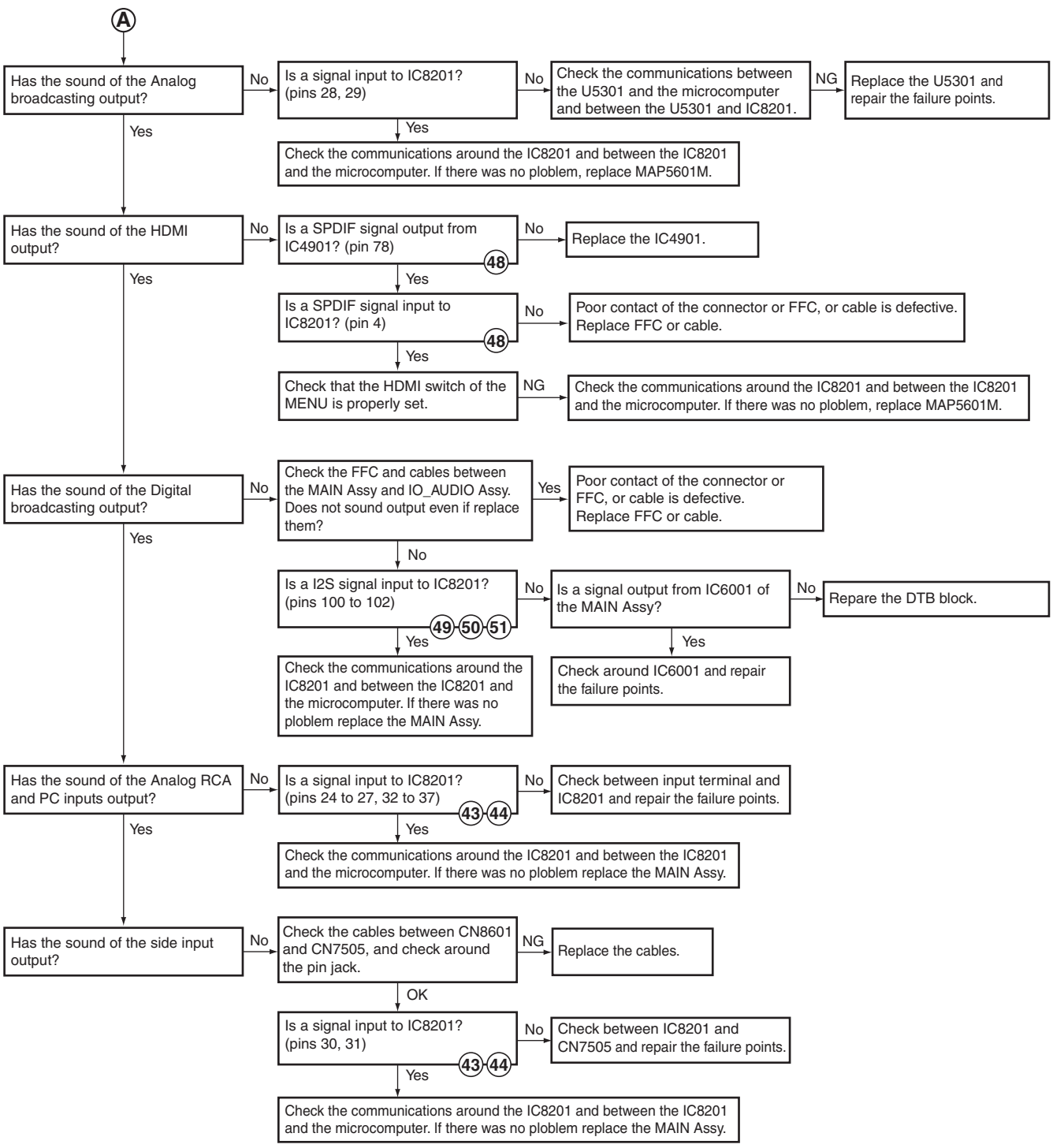

● Waveforms

Input signal: L/R 1 kHz, 0.5 Vrms (VOL 30)

48 **IC4901 - pin 78, IC8201 - pin 4** V: 1 V/div H: 1 μS/div	49 **IC8201 - pin 100** V: 1 V/div H: 10 μS/div	50 **IC8201 - pin 101** V: 1 V/div H: 10 μS/div	51 **IC8201 - pin 102** V: 1 V/div H: 10 μS/div
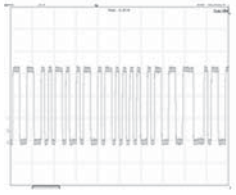	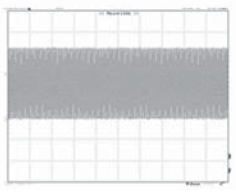	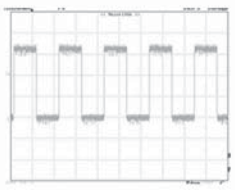	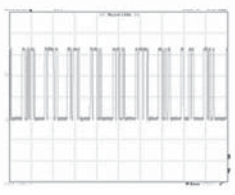

A

B

C

D

E

F

5.3 DIAGNOSIS OF PD (POWER-DOWN)

[1] BLOCK DIAGRAM OF THE POWER-DOWN SIGNAL

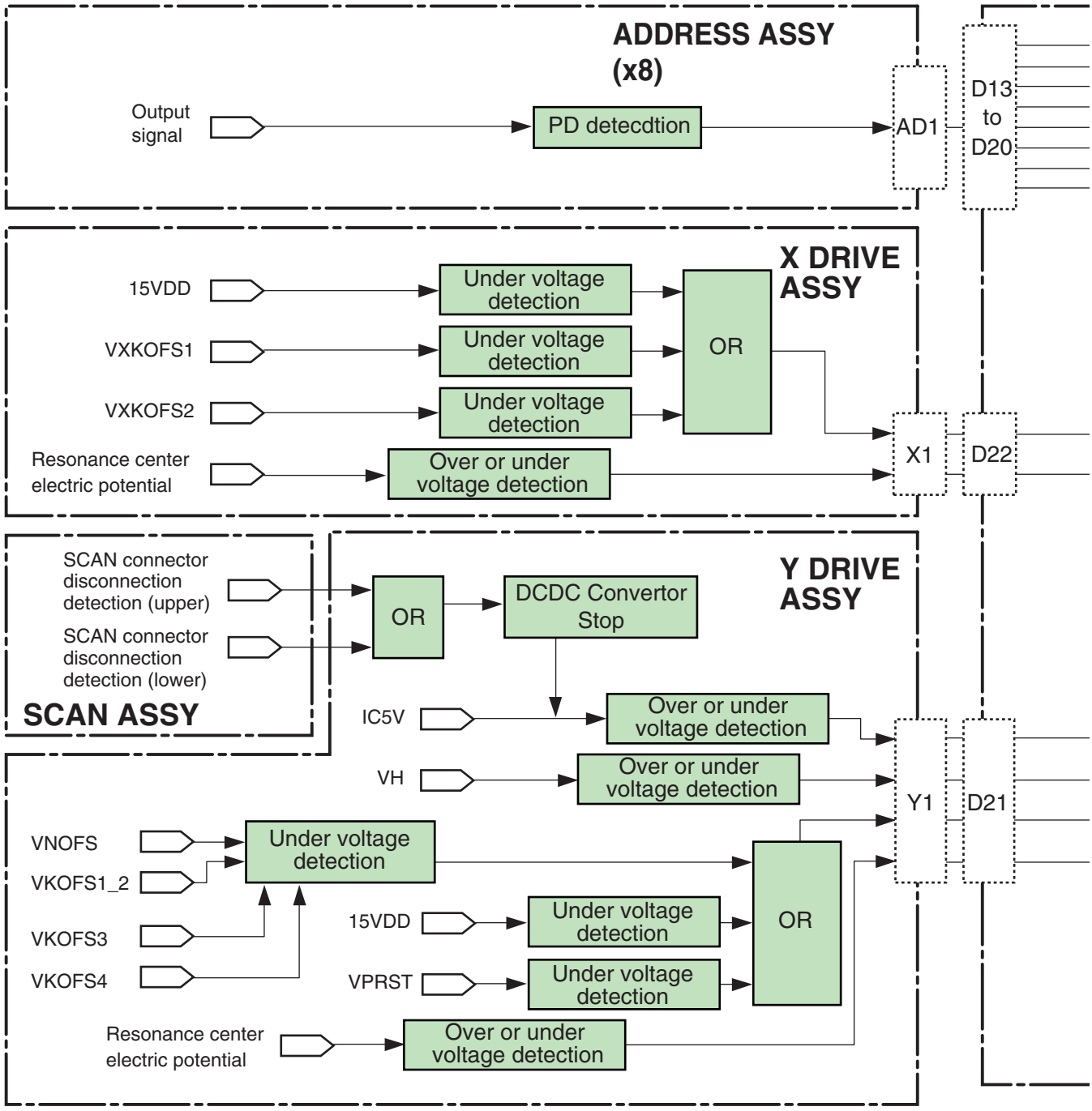

Note:
The figures ② to ⑫ indicate the number of times the Red LED flashes when power-down occurs in the corresponding route.

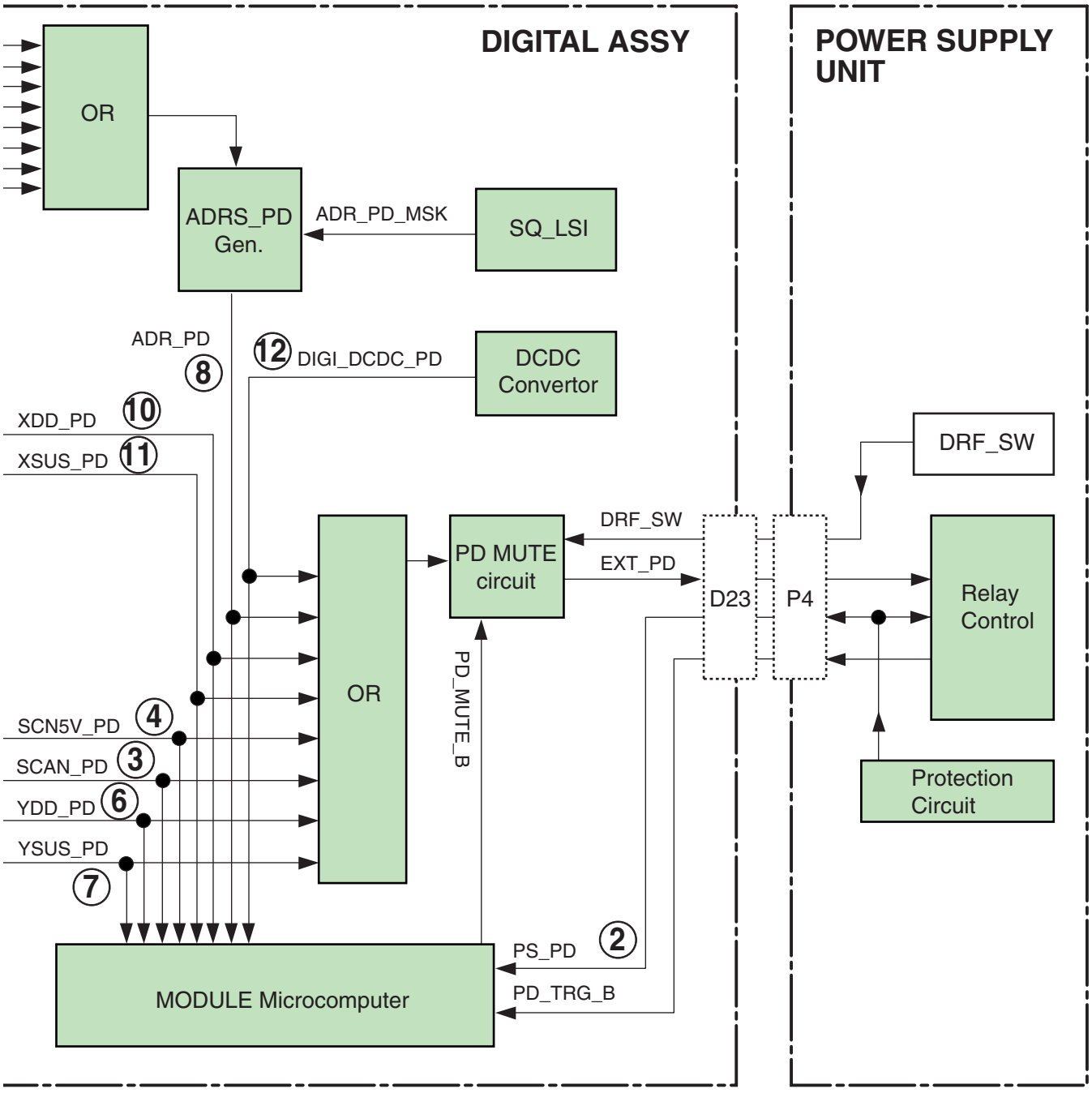

[2] PD (POWER-DOWN) DIAGNOSIS OF FAILURE ANALYSIS

Red LED Flashing Count	Factory History Display	Defective Assy	PD Outline	Checkpoint
2	P-PWR	POWER SUPPLY Unit	Each PD in the POWER SUPPLY Unit	
			Connector disconnection	Connector [P14][P15] (60”only)
		X DRIVE Assy	VSUS under voltage protection	X SUS block
		Y DRIVE Assy	VSUS under voltage protection	Y SUS block
		ADDRESS Assy	Connector disconnection	Connector [AD1]
		DIGITAL Assy	Connector disconnection	Connector [D13] to [D20]
3	SCAN	SCAN Assy	VH over or under voltage protection	SCAN IC
		X DRIVE Assy		X SUS block
		Y DRIVE Assy		Y SUS block
				VH DC/DC
				OFFSET block
			Connector disconnection	Connector [Y1][Y2]
		DIGITAL Assy	Connector disconnection	Connector [D21]
4	SCN5V	SCAN Assy	Connector disconnection	Connector [SA1][SB1][SB2][SC1][SC2] [SD1]
			IC5V over or under voltage protection	SCAN IC
		Y DRIVE Assy		IC5V DC/DC
6	Y-DCDC	Y DRIVE Assy	VNOFS under voltage protection	Y MSK block
				NOFS block
				VNOFS DC/DC
			VYPRST under voltage protection	VPRST regulaotr
				PR-U block
			15VDD under voltage protection	15V DC/DC
				SOFT-G block
			VKOFS1,2 under voltage protection	Y MSK block
				KNOFS2 block
				VYKOFS1, 2 regulaotr
			VKOFS3 under voltage protection	Y MSK block
				VYKOFS3 regulaotr
			VKOFS4 under voltage protection	Y MSK block
				KNOFS4 block
				VYKOFS4 regulaotr
7	Y-SUS	Y DRIVE Assy	Over or under voltage protection of the center electric potential	Y resonance block
		DIGITAL Assy	SQ_LSI does not operate	SEQ_LSI (Sync input, output waveform)
8	ADRS	ADDRESS Assy	VADR under voltage protection	Address resonance block
				TCP
			Connector disconnection	Connector [AD1][AD2]
		DIGITAL Assy	Connector disconnection	Connector [D13] to [D20]
		Y DRIVE Assy	Connector disconnection	Connector [Y2][Y5][Y6]
		X DRIVE Assy	Connector disconnection	Connector [X2][X3][X4]
		POWER SUPPLY Unit	Connector disconnection	Connector [P1][P2]
10	X-DCDC	X DRIVE Assy	Connector disconnection	Connector [X2]
			15VDD under voltage protection	X SUS block
				15V DC/DC
			VXKOFS1 under voltage protection	VXKOFS1 regulaotr
				X OFFSET block
			VXKOFS2 under voltage protection	VXKOFS2 regulaotr
				X OFFSET block
11	X-SUS	X DRIVE Assy	Over or under voltage protection of the center electric potential	X resonance block
12	D-DCDC	DIGITAL Assy	3.3V,2.5V,1.1V	DC/DC controlo IC
			Over voltage/under voltage/overcurrent protection	DC/DC block
15	UNKNOW	POWER SUPPLY Unit	Connector disconnection	Connector [P4]
		DIGITAL Assy	Connector disconnection	Connector [D23]
			ModuleUcom can not detection	Each PD line of ModuleUcom

Possible Defective Part	Remarks
	The POWER SUPPLY Unit of 60 inches model is a structure of the two parts.
Q1218,Q1219,Q1221-Q1223,Q1226	VSUS-SUSOUT and SUSOUT-SUSGND are short-circuited.
Q2217-Q2224	VSUS-SUSOUT and SUSOUT-SUSGND are short-circuited.
each SCAN IC	The abnormality of the SCAN IC
Q1218,Q1219,Q1221-Q1223,Q1226	VSUS-SUSOUT and SUSOUT-SUSGND are short-circuited.
Q2217-Q2219,Q2221-Q2223	VSUS-SUSOUT and SUSOUT-SUSGND are short-circuited.
IC2601,IC2603,IC2604	
Q2401,Q2402	KNOFS1 and KNOFS3 are short-circuited.
	[SB2][SC1][SC2][SD1] are 60 inches model only.
each SCAN IC	
Q2764,D2768,R2764	
Q2321-Q2326,Q2328-Q2331,Q2333,Q2334	L MSK is short-circuited.
Q2424,Q2429	NOFS is short-circuited.
D2606,Q2709-Q2711	
Q2604,Q2605,IC2602	
Q2418	PR-U is short-circuited.
Q2662,R2669,L2301,R2335	
Q2427	SOFT-G is short-circuited.
Q2321-Q2326,Q2328-Q2331,Q2333,Q2334	L MSK is short-circuited.
Q2430	KNOFS2 is short-circuited.
Q2702,Q2705,R2714	
Q2321-Q2326,Q2328-Q2331,Q2333,Q2334	L MSK is short-circuited.
Q2703,Q2706,R2715	
Q2321-Q2326,Q2328-Q2331,Q2333,Q2334	L MSK is short-circuited.
Q2432	KNOFS4 is short-circuited.
Q2704,Q2707,R2717	
Q2106-Q2109,Q2111,Q2113,D2104-D2107	
IC3301,IC3302	The history of SD1 remains
Q1711,Q1721,Q1731,Q1741,Q1911,Q1921,Q1931,D1711,D1721,D1731,D1741,D1911,D1921,D1931	
TCP (IC1651,IC1661,IC1671,IC1681,IC1851,IC1861,IC1871)	When the TCP is damaged, replace the panel.
	Ref No. of L Assy (6 pieces) and S Assy (2 pieces) are common use.
L1201,R1217	
Q1402	
Q1405,Q1406	
Q1302,Q1304	
Q1403,Q1404	
Q1301,Q1303	
Q1108,Q1112,Q1116,Q1119	
IC3801	
Q3841,Q3861,Q3881,L3841,L3861,L3881 R3820,R3848,R3868,R3888	
	EXT_PD line : Open
	EXT_PD line : Open
	It becomes "UNKNOW" except above-mentioned PD detection condition.

5.4 DIAGNOSIS OF SD (SHUTDOWN)

[1] BLOCK DIAGRAM OF THE SHUTDOWN SIGNAL

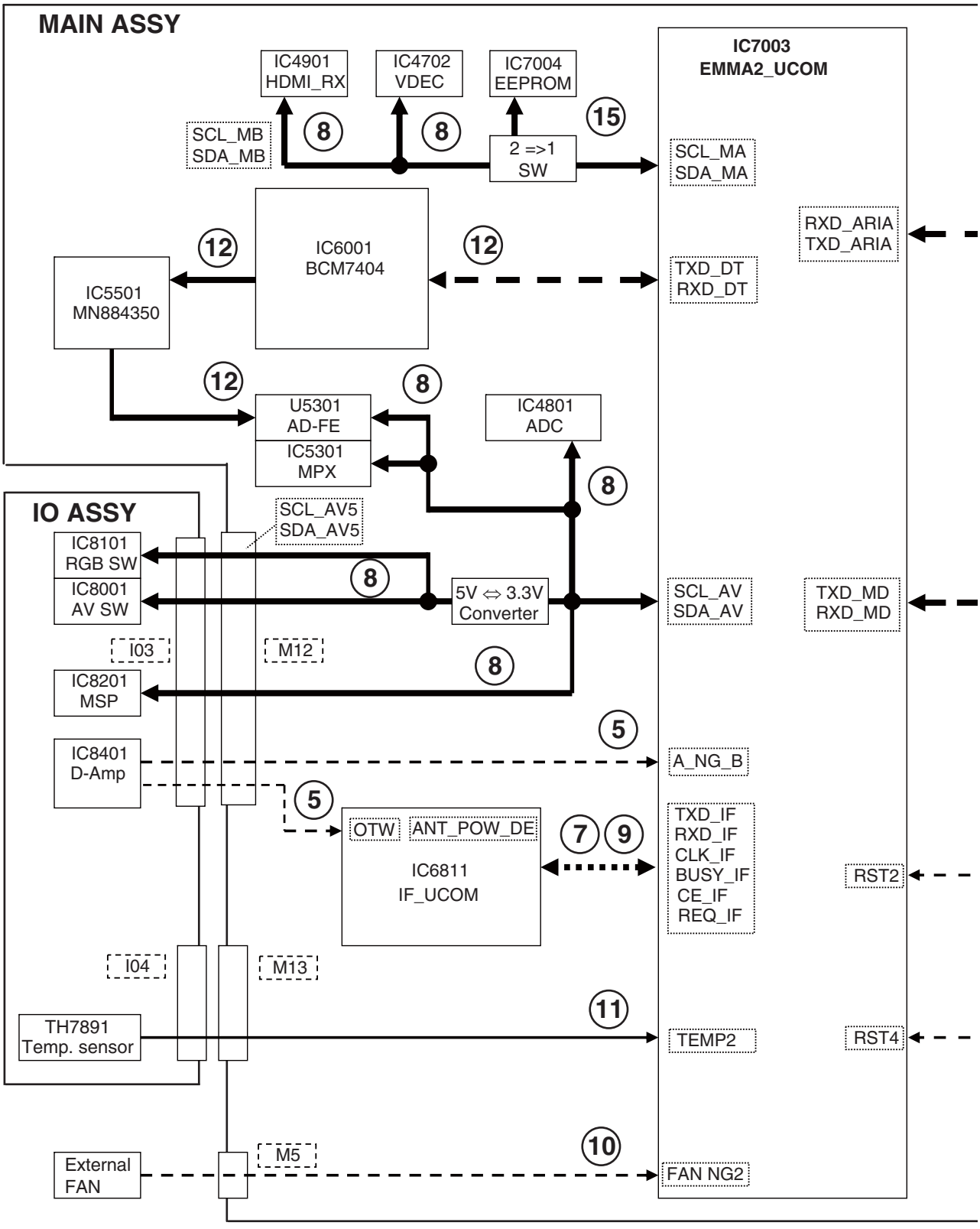

Note : The figures ① to ⑮ indicate the number of times the Blue LED flashes when shut-down occurs in the corresponding route.

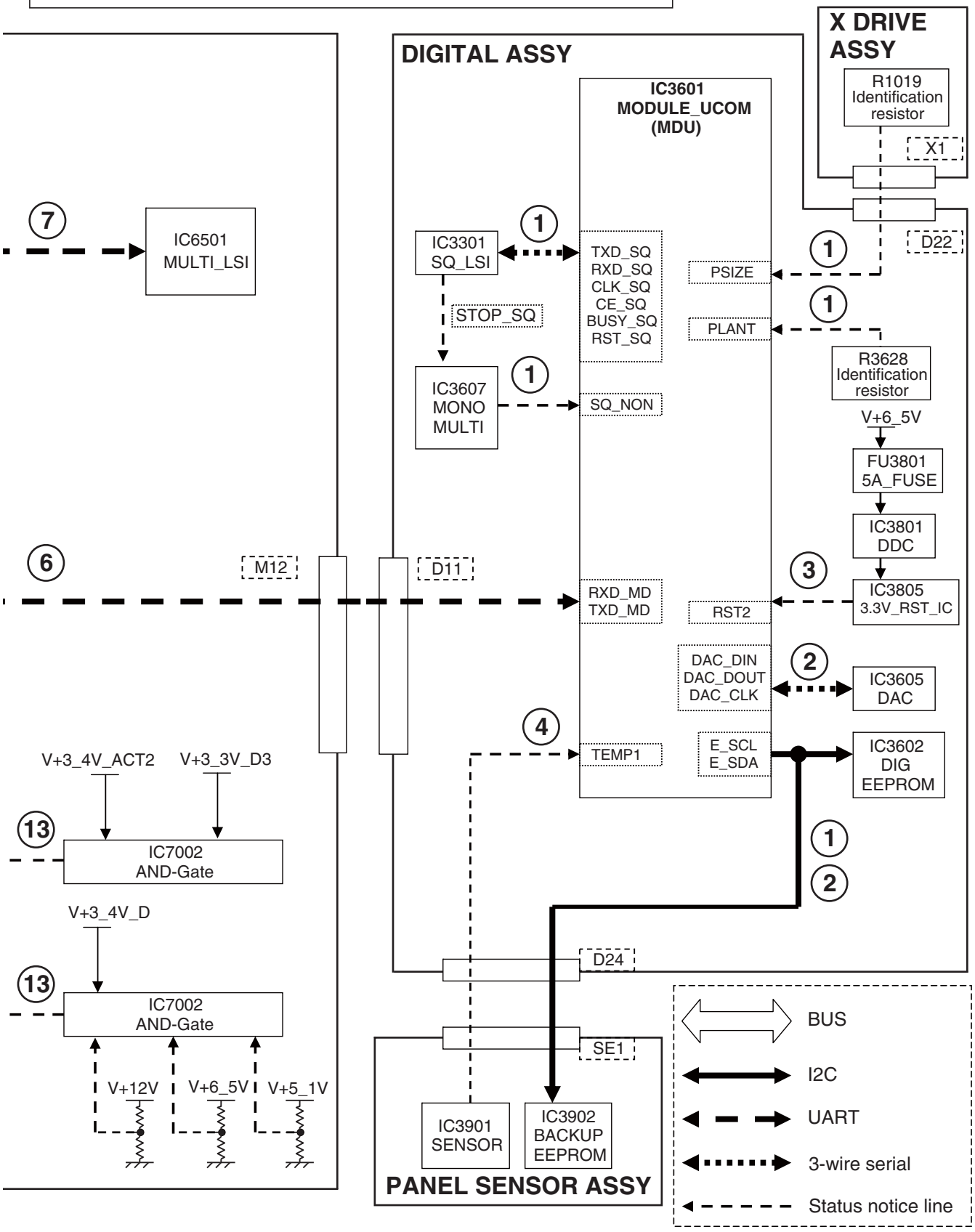

[2] SD (SHUTDOWN) DIAGNOSIS

Frequency of LED Flashing (*1)		Major Type	Detailed Type	Log Indication in Factory Mode		
				MAIN	SUB	
Blue 1	Orange 1	Abnormality in the Sequence LSI	Communication error	SQ-LSI	RTRY	
	Orange 2		Drive stop		SQNO	
	Orange 3		Busy		BUSY	
	Orange 4		Version mismatching (hardware, software)		VER-HS	
	Orange 5		Version mismatching (hardware, backup memory)		VER-HM	
	Orange 6		Version mismatching (hardware, DIGITAL memory)		VER-HI	
Blue 2	Orange 1	Failure in MDU device communication	Digital EEPROM	MD-DEV	EEPROM	
	Orange 2		Backup EEPROM		BACKUP	
	Orange 3		DAC IC		DAC	
Blue 3	–	Abnormality in RST2 power decrease	–	RST2	–	
Blue 4	Orange 1	Abnormality in panel temperature	Abnormality in high temperature	TMP-NG	TMP-H	
	Orange 2		Abnormality in low temperature		TMP-L	
Blue 5	Orange 1	Short-circuiting of the speakers Overcurrent detection D-AMP temperature abnormality	–	AUDIO	AUDIO	
	Orange 2				OTW	
Blue 6	–	Failure in communication with the module microcomputer	–	MODULE	–	
Blue 7	–	Failure in IF microcomputer	IF microcomputer	MA-3L	IF	
	Orange 2	3-wire serial communication	MULTI		MULTI	
Blue 8	Orange 1	Failure in IIC communication with the main microcomputer	Tuner 1	MA-IIC	FE1	
	Orange 2		MSP/MAP		MSPMAP	
	Orange 3		AV switch		AV-SW	
	Orange 4		RGB switch		RGB-SW	
	Orange 5		Main VDEC		VDEC	
	Orange 6		VDEC SDRAM		SDRAM	
	Orange 7		AD/PLL		ADC	
	Orange 8		HDMI		HDMI	
	Orange 11		US-MSP		US-MSP	
Blue 9	–	Failure in communication with the main microcomputer	–	MAIN	–	
Blue 10	Orange 2	Abnormality in FAN	FAN2	FAN	FAN2	
Blue 11	–	High temperature of the unit	–	TEMP2	–	
Blue 12	Orange 1	Digital Tuner	DTV startup error	DTUNER	PS/RST	
	Orange 2		DTV communication error		RETRY	
	Orange 3		DEVICE ERR		DEVICE	
	Orange 7		Tuner 1		DE-FE	
	Orange 18		Application		DTVAPP	
	Orange 19		DEMOD		DEMOD	
Blue 13	Orange 1	Failure in the power supply	DC-DC Converter power decrease	RST-MA	M-DCDC	
	Orange 2		POWER SUPPLY		RELAY	
Blue 15	–	Main EEPROM	Main EEPROM communication error	MA-EEP	–	

*1: If the DISPLAY key is pressed during shutdown (the blue LED is flashing), flashing of the orange LED, which indicates the subcategory, can be confirmed. The blue LED remains flashing. Pressing the DISPLAY key again will make the orange LED go dark.

Checkpoint	Possible Defective Part	Remarks
Communication line between MDU and SQ_LSI	IC3601/IC3301	SQ_IC communication not established. IC3301 may not have properly started up.
Drive detectig signal of MDU (SQ_NON)	CN3201/IC3601/ IC3301/IC3607	A shutdown occurs if the drive waveform periodically does not output. (When SQ_NON of MDU input is High, a shutdown is generated.)
Communication line between MDU and SQ_LSI (BUSY_SQ)	IC3601/IC3301	If BUSY_SQ remains high, a shutdown is generated.
Check the DIGITAL Assy and the software version of SEQ and the destination of the panel. Check the connection between [X1] and [D22].	IC3601/IC3301	When the identification resistor of PSIZE/PLANT and software version of SEQ are incoherent, a shutdown occurs.
Check the DIGITAL Assy and the software version of SEQ and the destination of the panel. Check the connections between [X1] and [D22], and [SE1] and [D24]. Communication line between MDU and BACKUP EEPROM	IC3601/ SENSOR Assy(IC3902)	When the identification resistor of PSIZE/PLANT and stored content of EEPROM on the SENSOR Assy are incoherent, a shutdown occurs.
Check the DIGITAL Assy and the software version of SEQ and the destination of the panel. Check the connections between [X1] and [D22]. Communication line between MDU and DIG EEPROM	IC3601/IC3602	When the identification resistor of PSIZE/PLANT and stored content of EEPROM on the DIGITAL Assy are incoherent, a shutdown occurs.
Communication line between MDU and DIG EEPROM	IC3601/IC3602	
Communication line between MDU and BACKUP EEPROM	IC3601/SENSOR Assy(IC3902)	
Communication line between MDU and DAC	IC3601/IC3605	
3.3 V output (TP3881) of DDC	IC3801/IC3805	If RST2 does not become high after the unit is turned on, a shutdown will be generated in several seconds.
V+6.5V of POWER SUPPLY Unit (Check [D25][P4]) FU3801 has melted.	POWER SUPPLY Unit, FU3801	Check if V + 6_5 V is started. Also check if the FU3801 on the DIGITAL Assy has been melted.
Installation environment	SENSOR Assy (IC3901)	If TEMP1 that is read by the module microcomputer is 85 °C or higher, a shutdown will be generated.
Installation environment Check the connection between SE1 and D24.	SENSOR Assy (IC3901)	A shutdown occurs if the reading of TEMP1 detected by the module micro-computer is –20 °C or less. Also check the connection between SE1 and D24.
Speaker terminals	JA8551	Check if any speaker cable is in contact with the chassis.
D_AMP	IC8401	Check if the AMP output is short-circuited.
Periphery of the cable between IO3 and M12, and IO4 and M13	CN7503,CN7504, CN4003,CN4004	Check if cables are firmly connected.
D_AMP	IC8401	Check the temperature that is 125 °C or less.
Communication line between MAIN and MOD	IC7003	Check the communication lines (TXD_MOD/RXD_MOD).
Periphery of the cable between D11 and M12	CN4101,CN4105	Check if cables are firmly connected.
Communication line between IF and MAIN	IC7003,IC6501	Check the communication lines (TXD_IF/RXD_IF/CLK_IF/BUSY_IF/CE_IF/REQ_IF).
Communication line between MULTI and MAIN	IC7003,IC6501	Check the communication lines (TXD_ARIA/RXD_ARIA).
IIC communication line between Tuner and MAIN	U5301,IC7003	Check the communication lines (SCL_TU/SDA_TU or SCL_AV/SDA_AV).
IIC communication line between MSP/MAP and MAIN	IC8201,IC7003	Check the communication lines (SCL_AV/SDA_AV).
IIC communication line between AV-SW and MAIN	IC8001,IC7003	Check the communication lines (SCL_AV5/SDA_AV5).
IIC communication line between RGB_SW and MAIN	IC8101,IC7003	Check the communication lines (SCL_AV5/SDA_AV5).
IIC communication line between M_VDEC and MAIN	IC4702,IC7003	Check the communication lines (SCL_MB/SDA_MB).
IIC communication line between VDEC and SDRAM	IC4702,IC4802	Check the communication lines (SDRAM). Defective SDRAM
IIC communication line between ADC and MAIN	IC4801,IC7003	Check the communication lines (SCL_AV/SDA_AV).
IIC communication line between HDMI_RX and MAIN	IC4901,IC7003	Check the communication lines (SCL_MB/SDA_MB).
IIC communication line between US_MSP and MAIN	IC5301,IC7003	Check the communication lines (SCL_AV/SDA_AV).
Communication line between IF and MAIN	IC6811,IC7003	Check the communication lines (TXD_IF/RXD_IF/CLK_IF/BUSY_IF/CE_IF/REQ_IF).
Dirt attached to the fan motor		Check the fan. (SD10 does not detect it at the temperature that fans do not turn.)
Periphery of the FAN CONNECT Assy		FAN NG
Periphery of the cable between FA1 and FA3		Check if cables are firmly connected.
Periphery of the fan control regulator	IC4303	Check that the voltage outputs it.
Ambient temperature		TEMP2 A shutdown occurs because of high temperature.
Temperature sensor or its periphery	TH7891	TEMP2
Periphery of the cable between IO4 and M13	CN7504,CN4004	Check if cables are firmly connected.
Startup of BCM7404	IC6001	Check the startup of the BCM7404 and the communication line with MAIN.
Communication line between BCM7404 and MAIN	IC6001	Check the startup of the BCM7404 and the communication line with MAIN.
Periphery of BCM7404	IC6001	
Front-end block	IC6001,U5301	Check the BCM7404 and its periphery device.
DTV application	IC6001	
DEMOD	IC6001,IC5501	Check the communication line between BCM7404 and DEMOD.
RST2 V+3_4V_ACT2, V+3_3V_D3	IC7002	Check if each voltages are started.
RST4 V+12V, V+6_5V, V+5_1V, V+3_4V_D	IC7002	Check if each voltages are started.
RST4 V+12V, V+6_5V, V+5_1V, V+3_4V_D	POWER SUPPLY Unit	Check if each voltages are started.
Check the cables M2 and M3.	CN4207, CN4210	Check if cables are firmly connected.
IIC communication line between EEPROM and MAIN	IC7004, IC7003	Check the communcation lines (SCL_EP/SDA_EP)

5.5 NON-FAILURE INFORMATION

[1] INFORMATION ON SYMPTOMS THAT DO NOT CONSTITUTE FAILURE

Symptom	Cause, item to check, information
HDMI: Symptoms concerning the input format and settings	
The picture color for an INPUT 4 to 7 signal is not correct.	The color setting for INPUT 4 to 7 is not compatible with that of the output equipment. Check whether the color setting is YPbPr or RGB.
The video signal to INPUT 4 to 7 is not displayed, and a message is displayed.	A unsupported video signal is input.
The audio signal input to the INPUT 4 to 5 is not output. No HDMI signal is input.	The audio setting for INPUT 4 to 5 is any setting and a video signal is not input. If the audio setting is any setting to output an analog audio signal, the HDMI signal must be input. (If a DVI device is to be connected, use a DVI-HDMI conversion cable.) If the HDMI video signal is not input, the analog audio signal is not output.
No sound of signals to INPUT 4 to 7 is output.	The setting on the side of the HDMI output equipment is wrong. Example: Dolby Digital
The 1080p input signal is not displayed properly or at all, although the 1080i input signal is displayed properly.	Check that the connected cable supports HDMI Category 2. (As the clock frequency for the 1080p signal is triple that for the 1080i signal, signal degradation caused by a cable must not be neglected. A cable supporting HDMI Category 2 can be used for the 1080p signal. Although some conventional cables can support the 1080p signal, some others cannot.)
DIGITAL OUT	
Playback of the signal from the DIGITAL audio output connector is possible, but recording is not possible.	The video signal output from the DIGITAL connector is copy-protected.
Miscellaneous	
The no-signal off function is not activated.	The no-signal off and no-operation off functions are effective only if video (composite, S video, component, HDMI [excluding PC]) input or TV input is selected.
The no-operation off function is not activated.	
Power management does not function.	Power Management is effective only while an analog PC signal is being input. It is not effective with HDMI-PC signal input.
The AUTO SETUP function is not activated.	The Auto Setup function is effective only while an analog PC signal is being input. This function does not work if an analog PC signal is not input, even if the INPUT PC is selected.
Control via the SR connector is not possible.	Wrong connection of the cable to the PC INPUT (AUDIO) connector is suspected.
The audio signal from the PC is not output.	Wrong connection of the cable to the SR connector is suspected.
The picture-quality setting (AV Selection) is not stored.	The picture-quality setting is stored for each input. As the setting is changed when another input is selected, the user may have a false idea that the setting is not stored.
The picture size changes arbitrary.	The Auto Size setting is set to ON.
The display position of the screen changes slightly while the screen is on.	The orbiter function for minimizing the effects of phosphor burn is activated. Although the setting for this function can be changed on the Home menu, retaining the factory setting is strongly recommended.
The video signal to the S video connector is not displayed.	The component video cable is connected to the same input function as for the S video (even if no signal is input to the component video connector, merely having something plugged in to the connector will result in judgment that a signal is being fed in and the component video connector takes priority). (Priority of connectors: component video > S video > composite video)
The video signal to the composite video connector is not displayed.	The S Video or component video cable is connected to the same input function as for the composite video. (Priority of connectors: component video > S video > composite video)

SUPPLEMENT: On the video setting for HDMI

There are three types of HDMI output formats: color difference 4:4:4, color difference 4:2:2, and RGB4:4:4.
(The proportions, such as 4:4:4 and 4:2:2, represent those of the amount of data for video signal components. For example, as for color difference 4:4:4, the proportion of the amount of data as for Y, Cb, and Cr is 4:4:4.)

It is required to make the settings of the PDP according to the settings of the output equipment. For usual operation, however, set them to AUTO. If the color is inappropriate, make the settings manually.
In the HDMI system, video signals are coded at 24 bits per pixel and transmitted as a series of 24-bit pixels. In a case of color difference 4:4:4, Y, Cb, and Cr use 8 bits each. In a case of color difference 4:2:2, Y, Cb, and Cr use 12 bits each, but Cb and Cr are transmitted at a half sampling rate of Y. This unit is capable of processing the upper 10 bits out of 12 bits of video data. Recent high-end DVD players, such as Pioneer DV-79AVi, are capable of outputting 10-bit color-difference signals. In general, it is said that picture quality for color difference 4:2:2 format is assumed to be higher, because human eyes are more sensitive to luminance than to colors. In the case of RGB4:4:4, R, G, and B use 8 bits each.

[2] FUNCTION OF DECREASING THE BRIGHTNESS LEVEL

If the panel temperature becomes high or a video signal that requires activation of panel protection is input, the unit will protect the panel by decreasing the brightness level.
* While a mask is being displayed, the panel protection function will not be activated.

Protection Function Name	Purpose	Conditions	Protection Function	Remarks
High-temperature protection function 1	For protection of parts (DCF)	Panel temperature (TEMP1) reaches 65 °C.	Offsetting the ABL adjustment value	
High-temperature protection function 2	For reducing heating in the unit	Panel temperature (TEMP1) reaches 80 °C.	Limiting for the maximum number of SUS pulses	
Panel protection function 1	For preventing burn-in	A still image is displayed for 3 minutes or more.	Limiting for the maximum number of SUS pulses	The picture will be considered to be still if only the mouse cursor is moved.
Panel protection function 2	For protection of SCAN ICs	An image with which a particular load is applied to one SCAN IC is displayed. (See Fig. 2)	Limiting for the maximum number of SUS pulses	
Panel protection function 3	For protection against panel cracking	An image with which the heat of part in the panel is increased is displayed. (See Fig. 3)	Limiting for the maximum number of SUS pulses	

■ Limiting for the maximum number of SUS pulses

By gradually decreasing the limit for the maximum number of SUS pulses, the temperature of the panel will be lowered.
- The limit for the maximum number of SUS pulses will be decreased by 8 per 5 seconds.
- The lower limit for the maximum number of SUS pulses is about 700.
- The maximum number of SUS pulses will begin to increase gradually if the conditions that led to activation of the protection function return to normal.

■ ABL adjustment value offset

By gradually offsetting the ABL adjustment value, the temperature of the panel will be lowered. The number of SUS pulses, which is determined based on the input APL (average picture level), will be decreased.
- The ABL adjustment value will be offset by one step per 30 seconds.
- The ABL adjustment value will be gradually restored if conditions that let to activation of the protection function return to normal.

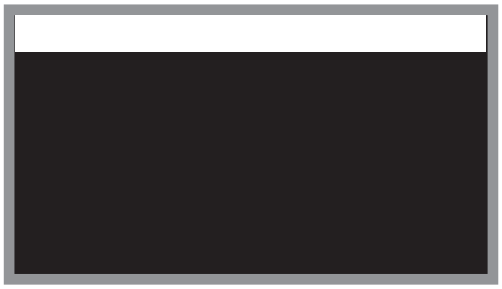

Fig. 2: Detection example: SCAN IC protection

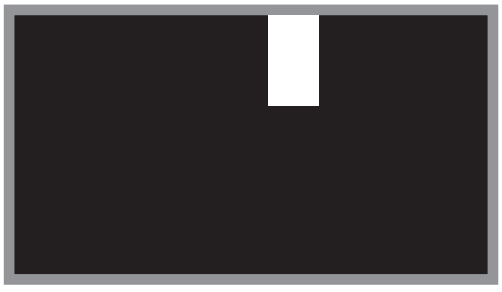

Fig. 3: Detection example: Protection against panel cracking

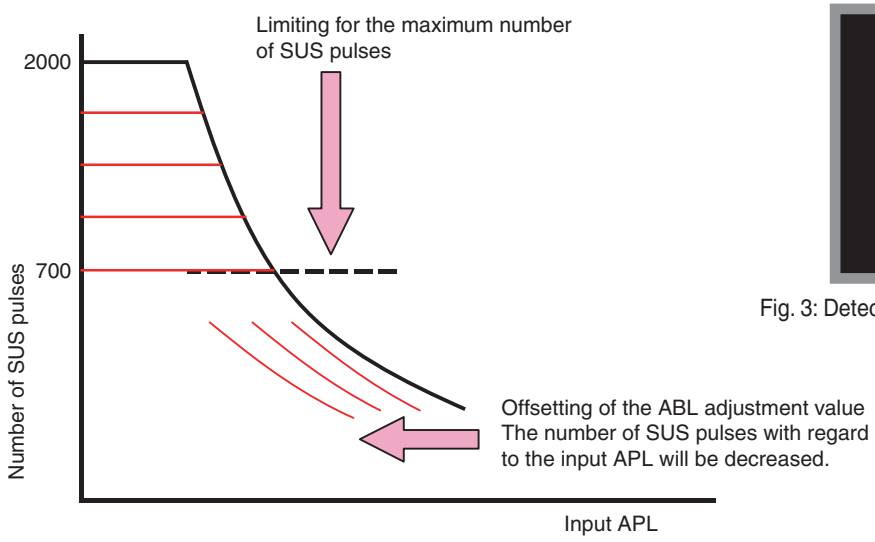

Fig. 1: Relationship between input APL and number of SUS pulses

5.6 OUTLINE OF THE OPERATION

[1] PANEL DRIVE-POWER ON/OFF FUNCTION

Function:
It is an operational mode where the digital signal processing performs circuit operation but the power is not supplied to the panel driving system (Vsus, VAddress) in order to avoid a power down (PD).

Application:
1. When it is necessary to check whether the signal output is correctly reaching the drive system in a repairing activity etc.
2. In the case of a PD, to determine whether the problem is with the panel drive-power supply or with the other system power supply.

Method:
1. Short-circuit between the specified location of the POWER SUPPLY Unit and GND (Multi base section recommended), using a jumper with alligator clips (refer to the photos below).
2. Execute [DRV S00] by RS-232C command. ([DRV S01] for release)

Supplemental explanation:
- When the panel drive-power is in OFF state, there will be no PD, except PS_PD, as the PD signal has been muted.
- If the clip is removed in the OFF state of the panel drive-power, PD will take place at the instance of clip removal. Therefore, be sure to remove the clip after turning the power OFF.
- Under RS-232C command control, [DRV S01] (release) is possible during power ON. However, there is a possibility of damaging the set. Therefore, make this operation only after turning the power OFF.
- Command [DRV S00/S01] is effective even during standby.
- Setting with RS-232C commands or the remote control unit is enabled during Standby mode. However, if the unit is left unoperated for about 10 seconds in Standby mode after setting with RS-232C commands or the remote control unit is completed, the setting will become void.
- When the main power switch is set to OFF, no command is accepted.
- Setting with RS-232C commands or the remote control unit will become void if the AC power cord is unplugged, the main power switch is set to OFF, or the unit is left unoperated for about 10 seconds in Standby mode.

When the panel drive-power is ON

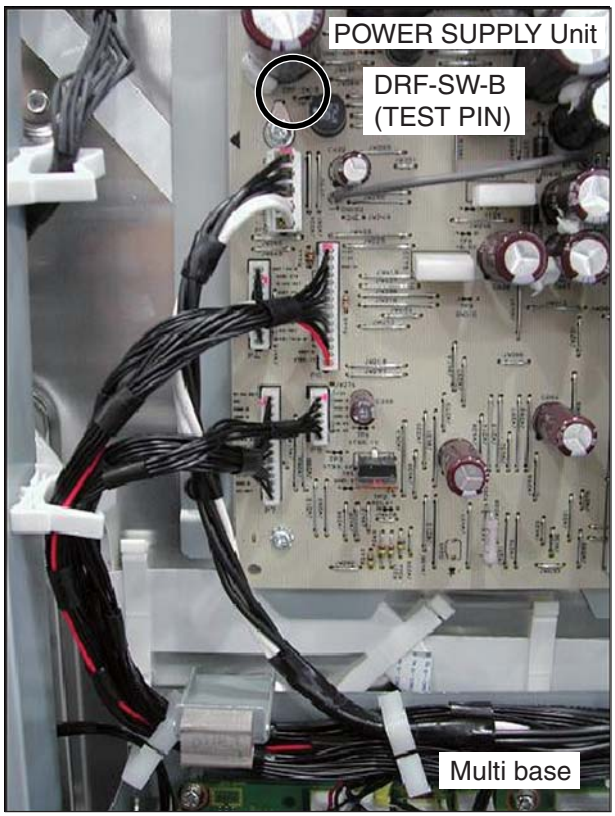

When the panel drive-power is OFF

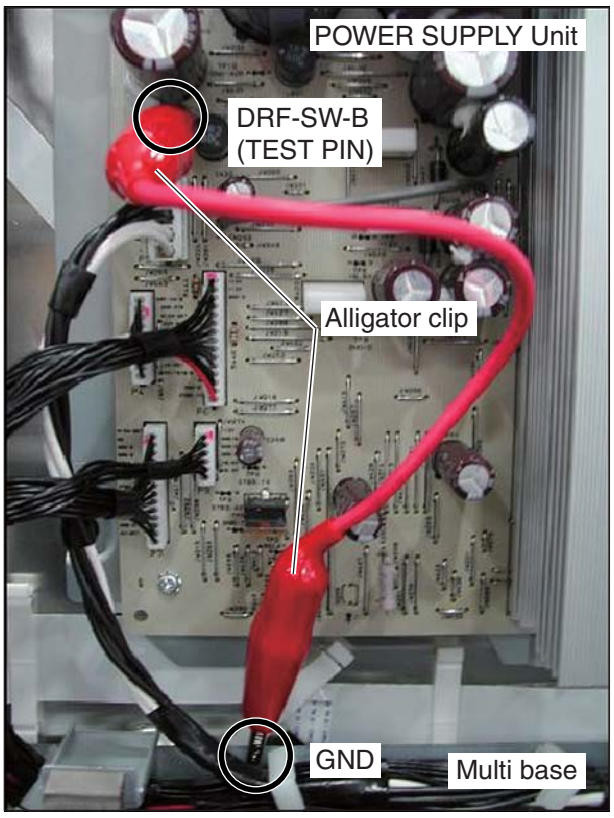

[2] SPECIFICATION OF THE FAN CONTROL

■ Block diagram

The external fans cool down the whole unit.

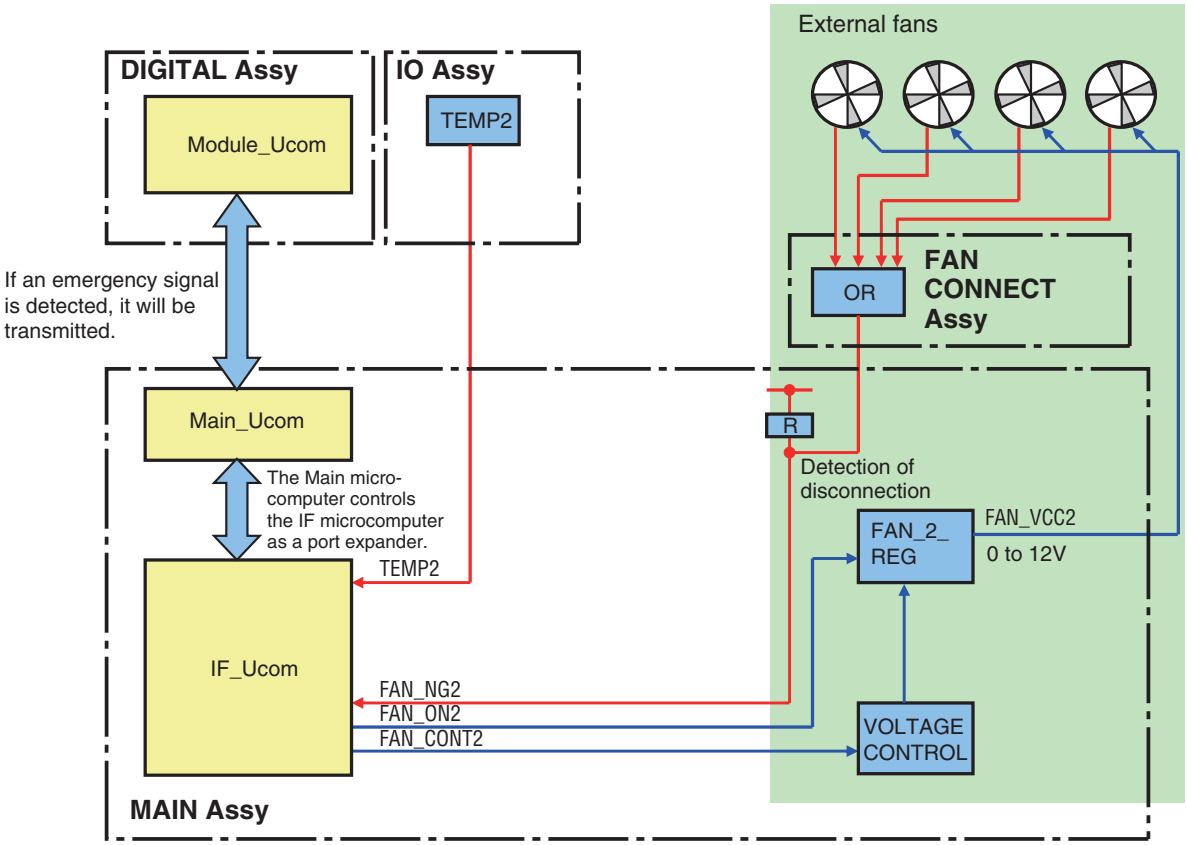

■ Operation specifications

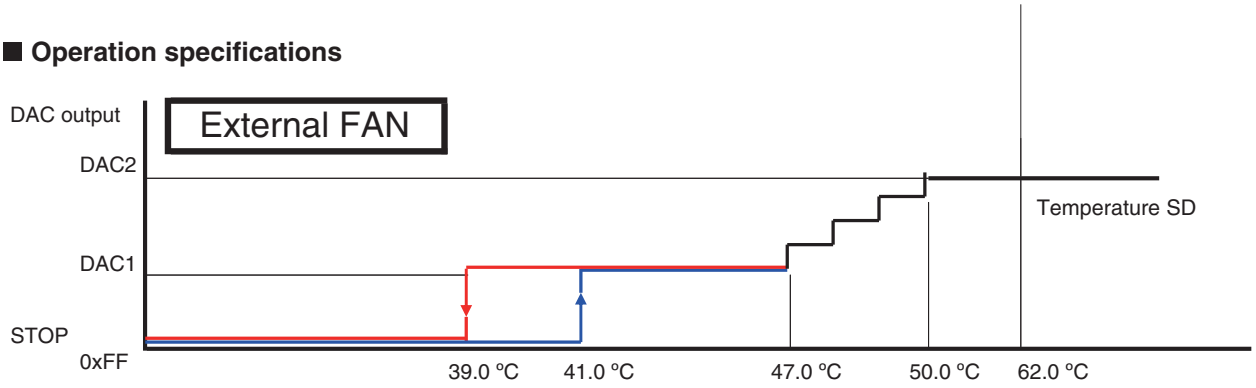

Notes:

- The operating temperature of the fan is higher than the ambient temperature, because the sensor temperature is read by the microcomputer.
- If the critical values for signals are displayed in the address circuit, the fan may be activated or be rotated at higher speed in response to values lower than the set temperature values shown above.
- When the temperature rises, the sensor voltage of TEMP2 decreases.
- When the voltage of the DAC output for external FAN decreases, rotation speed of FAN rises.

[3] PROCESSING IN ABNORMALITY

Speaker short-circuit

● Circuit configuration

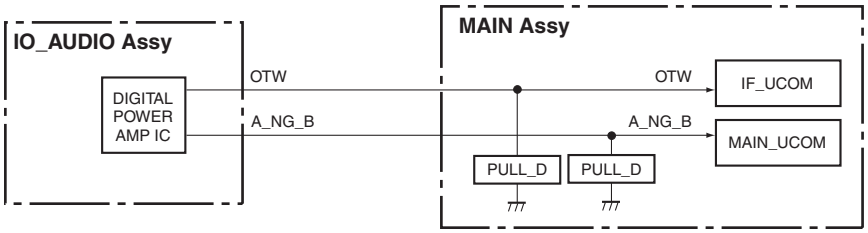

● Specifications for port monitoring

Port Name	SD/PD Indication	Active	Monitoring conditions	Operation
A_NG_B	AUDIO	Shutdown occurs when the signal is "L." 30 mS × 10 times	RST4 = "H" (always) (Monitoring starts 2 sec after the above conditions are established.)	The main CPU operations described below will be performed when either "A_NG_B = L" or "OTW = L" is detected (established) under the monitoring conditions.
OTW	AUDIO	Shutdown occurs when the signal is "L." 120 mS × 3 times		

● Operation specifications of the main CPU

(1) Establish the short-circuit of the speaker by the main CPU
- After a warning indication is displayed for 5 sec, a shutdown is generated (the blue LED flashes 5 times).
- A warning indication is displayed for all input-signal types.
- Example of a warning indication: "The speaker terminals are short-circuited. After reconnection, turn the unit on again."

(2) Display conditions
When the panel is on: A warning indication is displayed immediately.
When the panel is off: A warning indication is not displayed immediately but is displayed when the panel is turned on.

Note: A warning indication is displayed each time the panel is turned on if the conditions for a shutdown persist.

● Conditions for resetting the circuits

The circuits will be reset upon Standby ON/OFF.

Power supply and DC-DC converter

● Circuit configuration

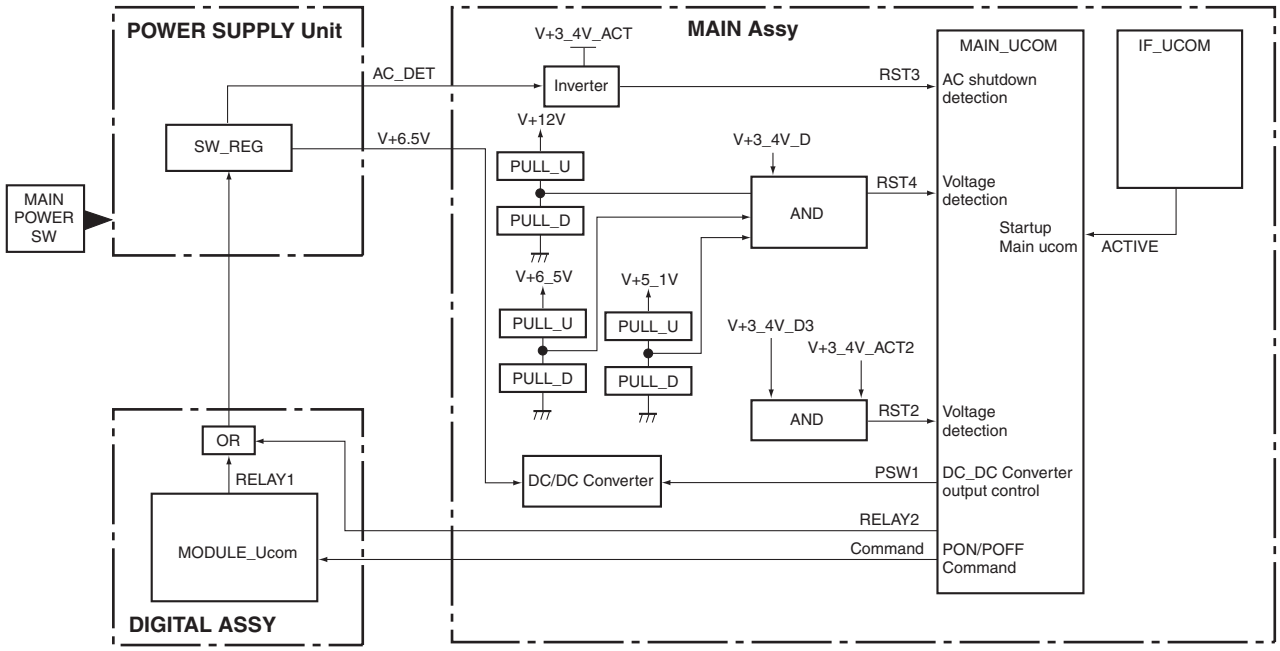

● Specifications for port monitoring

Port Name	SD/PD Indication	Active	Monitoring conditions	Operation
RST2	ASIC power (M-DCDC)	Shutdown occurs when the signal is "L." for 5 sec after PSW1 is ON. or for 2 sec while the unit is ON.	• Panel screen ON (RST4 = H and PSW1 = H) • While awaiting restoration of RST2 (RST2 = L)	Shutdown occurs immediately Blue LED flashes 13 times
RST3	AC power	AC_OFF when the signal is "H."	Excepting passive standby	If "RST3 = H" (AC_OFF) is detected under the monitoring conditions, a power-off process starts. Monitoring of the RST3 port is continued, while monitoring of other ports is interrupted. Communication is controlled only by the IF microcomputer. The port outputs are set as specified. If the signal at the RST3 port continues to be H after 30 mS of waiting, monitoring is continued. If RST3 is L, a restoration process starts according to the latest power-on/-off status.
RST4	MAIN power (RELAY)	Shutdown occurs if the signal is "L." for 5 sec after RELAY2 is ON. or for 2 sec while the unit is ON or in Functional STB.	RELAY2 = ON (High)	Shutdown occurs immediately Blue LED flashes 13 times

Fan and temperature sensor

● Circuit configuration

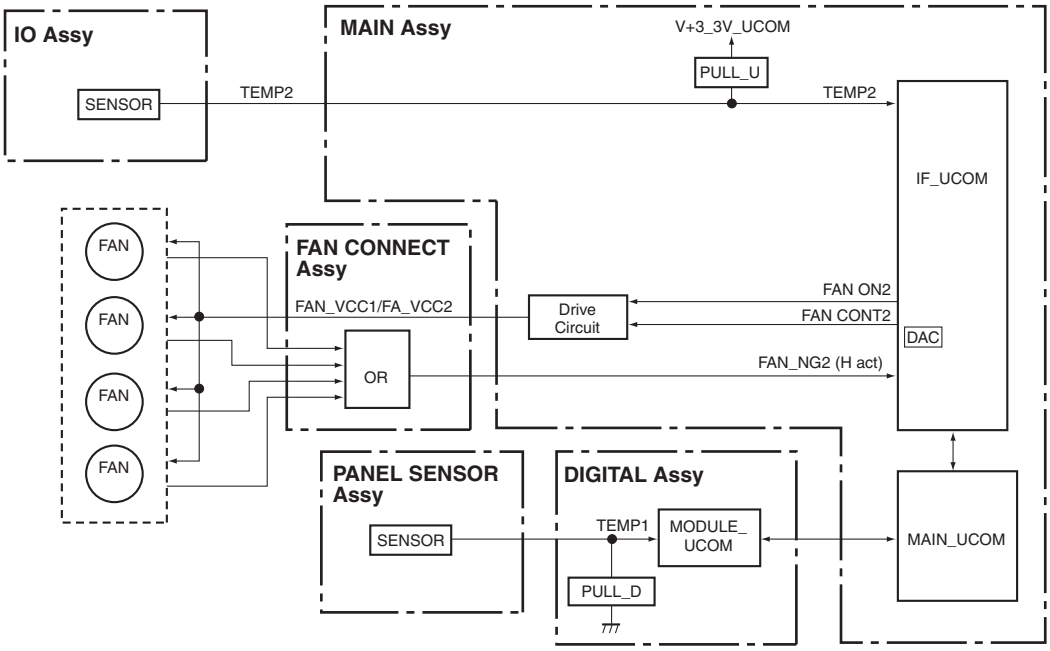

● Specifications for port monitoring

Port Name	SD/PD Indication	Active	Monitoring conditions	Operation
FAN_NG2	FAN	Shutdown occurs when the signal is "H." 1 S ∗ 3 times	RST2 = H and FAN_ON2 = H (Monitoring starts 3 sec after the above conditions are established.)	Shutdown occurs immediately Blue LED flashes 10 times
TEMP2	High temperature at MTB	Shutdown occurs if any values equal to or greater than minimum to require a shutdown are detected. 1 S ∗ 3 times	RST4 = H (Monitoring starts 1 sec after the above conditions are established.)	In the Panel screen ON: Shutdown occurs after the warning indication is displayed for 30 sec. In the Functional STB: Shutdown occurs immediately Blue LED flashes 11 times
TEMP1	Panel temperature is high	Shutdown occurs if any values equal to or greater than minimum to require a shutdown are detected. 200 mS ∗ 5 times (average)	Digital video RST2 = H	Shutdown occurs after waiting for 30 sec. Blue LED flashes 4 times
	Panel temperature is low			Shutdown occurs after waiting for 3 sec. Blue LED flashes 4 times

5.7 OUTLINE OF RS-232C COMMAND

[1] PREPARED TOOLS

It is necessary to prepare the following one to use 232C command.
- PC
- Application for control
- 232C cable (straight)

∗ The setting of the Com port cannot be communicated if it doesn't do correctly.
(Please follow a set explanation of PC in the Com port)

[2] USING RS-232C COMMANDS

Individual ports are provided for RS-232C and SR+ connectors with this model. Therefore, unlike the case of previous models, which required switching of exclusive operation between these connectors on the Integrator menu, switching is no longer required.

5.8 LIST OF RS-232C COMMANDS

RS-232C commands can be used in Service Factory mode. Before using RS-232C commands, it is necessary to change the factory presetting. See "5.7 OUTLINE OF RS-232C COMMAND".
[Note ; If you want to see version infomation (ex. QS1, QSE, Factory, Menu), Please see 10 seconds after starting.]

■ RS-232C command list

Command Name		Function	Active U-com		Last Memory	Effective only in Factory mode	Remarks
			MDU	MTB			
A							
ABL	***	Adjusting the upper limit of the power	●		MOD	●	
AMT	S00	Audio mute OFF		●			
	S01	Audio mute ON		●			
AP0	S**	ADDRESS L1, L2 setting	●		MOD	●	Note 1
AP1	S**	ADDRESS L3, L4 setting	●		MOD	●	Note 1
AP2	S**	ADDRESS U1, U2 setting	●		MOD	●	Note 1
AP3	S**	ADDRESS U3, U4 setting	●		MOD	●	Note 1
APN	***	1V average pulse number setting	●		MOD	●	
B							
BCP		Copying the backup data in the EEPROM	●		MOD	●	
BSM	S00	After image/Burning safe mode: OFF	●				
	S01	After image/Burning safe mode: ON	●				
C							
CHN	FWD	Changing tuner preset channel (1 step forward)		●			
	REV	Changing tuner preset channel (1 step reverse)		●			
CBU		Clearing backup data of EEPROM	●		MOD	●	
CHM		Clearing data of the hour meter	●	●	MOD	●	
CHR		Clearing data of the hour meter of MTB/MR side		●			Clear the hour meter of screen display of MAIN NG
CMT		Clearing data of the maximum temperature	●		MOD	●	
CNG		Clearing shutdown history of MTB/MR side		●			
CPC		Clearing power-on count data	●		MOD	●	
CPD		Clearing power-down histrory	●		MOD	●	
CPM		Clearing data of the pulse meter	●		MOD	●	
CSD		Clearing shutdown history of Panel side	●		MOD	●	
CSF	S00	Color sensor function OFF	●				
	S01	Color sensor function ON	●				
CSM	S01	Color space mode 1: Pioneer original	●				
	S02	Color space mode 2: EBU standard conformity	●				
CSB	***	Blue coefficient of color sensor	●		MOD	●	
CSG	***	Green coefficient of color sensor	●		MOD	●	
CSR	***	Red coefficient of color sensor	●		MOD	●	
CTP	S00	Color temperature switch OFF	●				
	S01	Color temperature switch LOW setting	●				
	S02	Color temperature switch MID LOW setting	●				
	S03	Color temperature switch MID setting	●				
	S04	Color temperature switch MID HIGH setting	●				
	S05	Color temperature switch HIGH setting	●				
D							
DIZ	S00	Dither/L dither OFF & noise OFF	●			●	
	S01	Dither/L dither ON & noise ON	●			●	
	S02	Dither/L dither OFF & noise ON	●			●	
	S03	Dither/L dither ON & noise OFF	●			●	
DRV	S00	Panel drive-power OFF	●				
	S01	Panel drive-power ON	●				
DW*		To subtract * to the adjustment value (* = 0 to 9, subtract 10 with DW0 and set to minimum value with DWF)		●			

Note 1: It is necessary to turn off the power for reflecting the setting change.

Command Name		Function	Active U-com		Last Memory	Effective only in Factory mode	Remarks
			MDU	MTB			
F							
FAJ		Determining the flag of the DIGITAL Assy adjustment in "adjustment is completed"	●		MOD	●	
FAN		Factory mode OFF	●	●		●	
FAY		Factory mode ON	●	●			
FBM	S00	OFF (In-phase SUS drive prohibition)	●		MOD	●	Note 1
	S01	MODE1 (In-phase SUS drive permission)	●		MOD	●	Note 1
FST	S21	Set each memory setting of MTB/MR side to the shipment state.		●		●	
I							
INA	***	Switching the terrestrial analog signal, direct tuning (***: channel number)		●	MAIN		
		Switching the terrestrial analog signal		●	MAIN		
INC	***	Switching the terrestrial digital signal, direct tuning (***:channel number)		●	MAIN		
		Switching the terrestrial digital signal		●	MAIN		
INH	***	Switching the Home Media Gallery		●			
INP	S01	Input switch: INPUT 1		●	MAIN		
	S02	Input switch: INPUT 2		●	MAIN		
	S03	Input switch: INPUT 3		●	MAIN		
	S04	Input switch: INPUT 4		●	MAIN		
	S05	Input switch: INPUT 5		●	MAIN		
	S06	Input switch: INPUT 6		●	MAIN		
	S07	Input switch: INPUT 7		●	MAIN		
	S08	Input switch: INPUT 8 (PC)		●	MAIN		
M							
MIR	S00	Mirror display mode: OFF	●				
	S01	Mirror display mode: Right and left inversion	●				
	S02	Mirror display mode: Top and bottom inversion	●				
	S03	Mirror display mode: Top and bottom and right and left inversion	●				
MKC	S00	MASK OFF	●		MOD		
	S01	H ramp (slant 1) M	●		MOD	●	
	S02	H ramp (slant 4) M	●		MOD	●	
	S03	Slanting ramp M	●		MOD	●	
	S04	30 for aging	●		MOD	●	
	S05	05 for aging	●		MOD	●	
	S06	Erasing afterimage 1	●		MOD	●	
	S07	Erasing afterimage 2	●		MOD	●	
	S08	White (change in luminance level)	●		MOD	●	
	S09	PEAK detection raster	●		MOD	●	
	S10	Address lack check	●		MOD	●	
	S11	Green vertical line scroll	●		MOD	●	
	S12	Green horizontal line scroll	●		MOD	●	
	S13	Vertical ramp vertical scroll (white)	●		MOD	●	
	S14	Vertical ramp vertical scroll (green)	●		MOD	●	
	S15	Horizontal ramp horizontal scroll (white)	●		MOD	●	
	S16	Horizontal ramp horizontal scroll (green)	●		MOD	●	
	S17	Cross hatch + window	●		MOD	●	
MKS	S00	MASK OFF	●		MOD		
	S01	H ramp (slant 1)	●		MOD	●	
	S02	H ramp (slant 4)	●		MOD	●	

Note 1: It is necessary to turn off the power for reflecting the setting change.

Command Name		Function	Active U-com		Last Memory	Effective only in Factory mode	Remarks
			MDU	MTB			
M							
MKS	S03	V ramp (slant 1)	●		MOD	●	
	S04	Slanting ramp	●		MOD	●	
	S05	Window (Hi= 870, Lo= 102)	●		MOD	●	
	S06	Window (Hi= 1023, Lo= 102)	●		MOD	●	
	S07	Window (Hi= 1023, Lo=000)	●		MOD	●	
	S08	Window (Hi= 1023) 4 %	●		MOD	●	
	S09	Window (Hi= 1023) 1.25 %	●		MOD	●	
	S10	Window (1/7 LINE)	●		MOD	●	
	S11	STRIPE (MGT/GRN)	●		MOD	●	
	S12	STRIPE (GRN/MGT)	●		MOD	●	
	S13	B & W, checker (1 line)	●		MOD	●	
	S14	B & W, checker (2 lines)	●		MOD	●	
	S15	B & W, checker (4 lines)	●		MOD	●	
	S16	B & W, checker (8 lines)	●		MOD	●	
	S17	COLOR BAR	●		MOD	●	
	S18	Slanting lines	●		MOD	●	
	S19	Red & black, checker (1 line)	●		MOD	●	
	S20	Red & black, checker (2 lines)	●		MOD	●	
	S21	Red & black, checker (4 lines)	●		MOD	●	
	S22	Red & black, checker (8 lines)	●		MOD	●	
	S23	Erasing afterimage (RGB: zigzag, V: reverse)	●		MOD	●	
	S24	Black raster (max SUS pulses)	●		MOD	●	Note 5
	S25	1 for perfect linear	●		MOD	●	
	S26	2 for perfect linear	●		MOD	●	
	S27	3 for perfect linear	●		MOD	●	
	S28	4 for perfect linear	●		MOD	●	
	S29	RGB checker 1	●		MOD	●	
	S30	RGB checker 2	●		MOD	●	
	S31	Window RED (RED=1023)	●		MOD	●	
	S32	Window GREEN (GREEN=1023)	●		MOD	●	
	S33	Window BLUE (BLUE=1023)	●		MOD	●	
	S34	Even line horizontal stripes	●		MOD	●	
	S35	Odd line horizontal stripes	●		MOD	●	
	S36	Afterimage check 1	●		MOD	●	
	S37	Afterimage check 2	●		MOD	●	
	S38	Afterimage check 3	●		MOD	●	
	S39	Afterimage check 4	●		MOD	●	
	S40	Red single-color slanting ramp	●		MOD	●	
	S41	GREEN single-color slanting ramp	●		MOD	●	
	S42	BLUE single-color slanting ramp	●		MOD	●	
	S43	For panel light check 1	●		MOD	●	
	S44	For panel light check 2	●		MOD	●	
	S45	5 for perfect linear	●		MOD	●	
	S46	6 for perfect linear	●		MOD	●	
	S47	7 for perfect linear	●		MOD	●	
	S48	8 for perfect linear	●		MOD	●	
	S49	Mask for ABL adjustment	●		MOD	●	

Note 5: Peak luminance detection function (PKD) modification is impossible.

Command Name		Function	Active U-com		Last Memory	Effective only in Factory mode	Remarks
			MDU	MTB			
MKR	S00	MASK OFF	●		MOD		
	S01	Raster - White	●		MOD	●	
	S02	Raster - Red	●		MOD	●	
	S03	Raster - Green	●		MOD	●	
	S04	Raster - Blue	●		MOD	●	
	S05	Raster - Black	●		MOD	●	
	S06	Raster - Cyan	●		MOD	●	
	S07	Raster - Magenta	●		MOD	●	
	S08	Raster - Yellow	●		MOD	●	
	S09	Raster - Pink	●		MOD	●	
	S10	Raster - Yellow egg color	●		MOD	●	
	S11	Raster - Light blue	●		MOD	●	
	S12	Raster - Beige	●		MOD	●	
	S13	Raster - Yellow green	●		MOD	●	
	S14	Raster - Cyan 120	●		MOD	●	
	S15	Raster - Magenta 120	●		MOD	●	
	S16	Raster - Yellow 120	●		MOD	●	
	S17	Raster - Gray 120	●		MOD	●	
	S18	Raster - Red 626	●		MOD	●	
	S19	Raster - Green 626	●		MOD	●	
	S20	Raster - Blue 626	●		MOD	●	
	S21	Raster - Red 1023+	●		MOD	●	
	S22	Raster - Green 1023+	●		MOD	●	
	S23	Raster - Blue 1023+	●		MOD	●	
	S24	Raster - Green 225	●		MOD	●	
	S25	Raster - Gray 307	●		MOD	●	
MSE	S00	Product form : one body/monitor model	●		MOD	●	Note 1
	S01	Product form : System model	●		MOD	●	Note 1
MST	S00	Display one screen		●			
	S01	PsideP (Main size: normal)		●			
	S02	PinP (Right down)		●			
	S03	PinP (Right up)		●			
	S04	PinP (Left down)		●			
	S05	PinP (Left up)		●			
	S08	SWAP (Exchanging sub-screen)		●			
N							
NGP	S00	Negative positive inversion: OFF	●				
	S01	Negative positive inversion: ON	●				
O							
OSD	S00	OSD display setting: ON		●	MAIN		
	S01	OSD display setting: OFF		●	MAIN		
P							
PAV	S00	AV selection: FACTORY	●				
	S01	AV selection: STANDARD / PERFORMANCE	●				
	S02	AV selection: DYNAMIC	●				
	S03	AV selection: MOVIE	●				
	S04	AV selection: GAME	●				
	S05	AV selection: SPORT	●				
	S06	AV selection: PURE	●				
	S07	AV selection: USER	●				

Note 1: It is necessary to turn off the power for reflecting the setting change.

Command Name		Function	Active U-com		Last Memory	Effective only in Factory mode	Remarks
			MDU	MTB			
P							
PAV	S08	AV selection: isf-DAY	●				
	S09	AV selection: isf-NIGHT	●				
	S10	AV selection: OPTIMUM	●				
	S11	AV selection: isf-AUTO	●				
	S12	AV selection: Standard	●				
	S13	AV selection: Reserved (Australian standard)	●				
PBH	***	Panel white balance adjustment - Blue highlight	●		MOD	●	
PBL	***	Panel white balance adjustment - Blue low light	●		MOD	●	
PBX	***	Panel Bx measuring value	●		MOD	●	
PBY	***	Panel By measuring value	●		MOD	●	
PCS	S00	Normal operation	●				
	S01	Catalog specification operation	●				
PDM	S00	Passing PD signals to the POWER SUPPLY Unit => Power-down	●				
	S01	Not passing PD signals to the POWER SUPPLY Unit => No power-down	●				
PES	S00	For general-purpose commonness: Standard	●				
	S01	For general-purpose commonness: Energy saving 1	●				
	S02	For general-purpose commonness: Energy saving 2	●				
	S10	For general-purpose Japan standard: Standard	●				
	S11	For general-purpose Japan standard: Energy saving 1	●				
	S12	For general-purpose Japan standard: Energy saving 2	●				
PFL	S**	Center luminance correction	●				
	S00	Peripheral luminance correction: OFF	●				
	S01	Peripheral luminance correction: ON fixed	●				
	S02	Peripheral luminance correction: APL interlocked ON	●				
PFN		Factory mode at panel side: OFF	●			●	
PFS		Setup the panel side to shipment	●		MOD	●	
PFY		Factory mode at panel side: ON	●				Note 2
PGB	S00	Blue gamma setting: Straight	●				
	S01	Blue gamma setting: Fixed on 1.6	●				
	S02	Blue gamma setting: Fixed on 1.7	●				
	S03	Blue gamma setting: Fixed on 1.8	●				
	S04	Blue gamma setting: Fixed on 1.9	●				
	S05	Blue gamma setting: Fixed on 2.0	●				
	S06	Blue gamma setting: Fixed on 2.1	●				
	S07	Blue gamma setting: Fixed on 2.2	●				
	S08	Blue gamma setting: Fixed on 2.3	●				
	S09	Blue gamma setting: Fixed on 2.4	●				
	S10-31	Blue gamma setting: Customize	●				
PGG	S00	Green gamma setting: Straight	●				
	S01	Green gamma setting: Fixed on 1.6	●				
	S02	Green gamma setting: Fixed on 1.7	●				
	S03	Green gamma setting: Fixed on 1.8	●				
	S04	Green gamma setting: Fixed on 1.9	●				
	S05	Green gamma setting: Fixed on 2.0	●				
	S06	Green gamma setting: Fixed on 2.1	●				
	S07	Green gamma setting: Fixed on 2.2	●				
	S08	Green gamma setting: Fixed on 2.3	●				
	S09	Green gamma setting: Fixed on 2.4	●				
	S10-31	Green gamma setting: Customize	●				
PGH	***	Panel white balance adjustment - Green highlight	●		MOD	●	

Note 2: Mask setting and the picture quality setting of MTB are not changed.

Command Name		Function	Active U-com		Last Memory	Effective only in Factory mode	Remarks
			MDU	MTB			
P							
PGL	***	Panel white balance adjustment - Green low light	●		MOD	●	
PGX	***	Panel Gx measuring value	●		MOD	●	
PGY	***	Panel Gy measuring value	●		MOD	●	
PGR	S00	Red gamma setting: Straight	●				
	S01	Red gamma setting: Fixed on 1.6	●				
	S02	Red gamma setting: Fixed on 1.7	●				
	S03	Red gamma setting: Fixed on 1.8	●				
	S04	Red gamma setting: Fixed on 1.9	●				
	S05	Red gamma setting: Fixed on 2.0	●				
	S06	Red gamma setting: Fixed on 2.1	●				
	S07	Red gamma setting: Fixed on 2.2	●				
	S08	Red gamma setting: Fixed on 2.3	●				
	S09	Red gamma setting: Fixed on 2.4	●				
	S10-31	Redt gamma setting: Customize	●				
PKD	S00	Peak luminance detection: OFF	●			●	
	S01	Peak luminance detection: ON	●			●	
PKL	S00	No brightness limitation : 100 %	●				
	S01	Brightness limitation 1 : 87 %	●				
	S02	Brightness limitation 2 : 73 %	●				
	S03	Brightness limitation 3 : 60 %	●				
	S04	Brightness limitation 4 : 52 %	●				
	S05	Brightness limitation 5 : 40 %	●				
	S06	Brightness limitation 6 : 27 %	●				
	S07	Brightness limitation 7 : 13 %	●				
PMT	S00	Canceling panel muting	●				Note 3
	S01	Panel muting	●				
POF		Power OFF	●	●	MAIN		
PON		Power ON	●	●	MAIN		
PPT	S00	Panel protection function: OFF	●			●	
	S01	Panel protection function: ON	●			●	
PRH	***	Panel white balance adjustment - Red highlight	●		MOD	●	
PRL	***	Panel white balance adjustment - Red low light	●		MOD	●	
PRX	***	Panel Rx measuring value	●		MOD	●	
PRY	***	Panel Ry measuring value	●		MOD	●	
PUC	S00	Pure cinema: OFF		●	MAIN	●	
	S01	Pure cinema: Standard		●	MAIN	●	
	S02	Pure cinema: Advance		●	MAIN	●	
	S03	Pure cinema: Smooth		●	MAIN	●	
Q							
QAJ		Acquiring various adjustment values of the panel side	●				
QMT		Acquiring temperature of MTB/MR side and Fan speed		●			
QNG		Acquiring shutdown information of MTB/MR side		●			
QPD		Acquiring logs of power-down points	●				
QPM		Acquiring data of the pulse meter	●				
QPW		Acquiring panel white balance adjustment values	●				
QPF		Acquiring characteristic / function setting values of the panel side	●				
QS1		Acquiring unit data, such as the software version	●	●			
QS2		Acquiring data on the status of the unit, such as temperature	●				

Note 3: The mute is unable while displaying the internal mask.

Command Name		Function	Active U-com		Last Memory	Effective only in Factory mode	Remarks
			MDU	MTB			
Q							
QS3		Each information output for panel	●				
QS5		Each information output for panel (individual function)	●				
QSE		Acquiring unit data, such as the software version of MTB/MR side (specific destination)		●			
QSP		Acquiring sub-version of the microcomputer for panel	●				
QSD		Acquiring data on shutdown	●				
QSI		Acquiring data related with signals	●				
R							
R1K	***	First reset (wedge width)	●		MOD	●	
R2K	***	Second reset (wedge width)	●		MOD	●	
RBL	S00-07	BLUE setting for panel degradation correction : Level 0 to 7	●		MOD	●	Note 1
RGL	S00-07	GREEN setting for panel degradation correction : Level 0 to 7	●		MOD	●	Note 1
RLS	S00	Room light sensor operation : OFF	●				
	S01-05	Room light sensor operation : 1 to 5	●				
RRL	S00-07	RED setting for panel degradation correction : Level 0 to 7	●		MOD	●	Note 1
S							
SAT	***	Timing adjustment between the scan and address	●		MOD	●	
SCW	S00	Normal operation	●				
	S01	Draw the warning blue window (left side)	●				
	S02	Draw the warning red window (right side)	●				
SDF	S00	SRS DEFINITION: OFF		●			
	S01	SRS DEFINITION: DEFINITION1		●			
	S02	SRS DEFINITION: DEFINITION2		●			
	S03	SRS DEFINITION: DEFINITION3		●			
SDM	S00	Shutdown enabled	●				
	S01	Shutdown prohibited	●				
SFR	S01-08	Measures against AM radio noise - Pattern 1 to 8	●		MOD	●	Note 1
SKM	S00	STREAKING correction mode OFF	●		MOD	●	
	S01-08	STREAKING correction mode Setting mode 1 to 8	●		MOD	●	
SMC	S00	Smooth clear drive OFF	●			●	
	S01	Smooth clear drive ON	●			●	
SML	***	Adjustment of the side mask level		●	MAIN	●	
SN0	***	Setting of the serial No. 0 (panel)	●		MOD	●	
SN1	***	Setting of the serial No. 1 (panel)	●		MOD	●	
SN2	***	Setting of the serial No. 2 (panel)	●		MOD	●	
SN3	***	Setting of the serial No. 3 (panel)	●		MOD	●	
SN4	***	Setting of the serial No. 4 (panel)	●		MOD	●	
SQM	S01	VIDEO sequence setting	●				
	S02	PC sequence setting	●				
	S03	FILM sequence setting	●				
SRS	S00	SRS: OFF		●			
	S01	SRS: SRS1		●			
	S02	SRS: SRS2		●			
	S03	SRS: SRS3		●			
SSM	S00	SSCG OFF	●			●	
	S01	SSCG ON	●			●	
SWA	***	Estimated value of the illuminant color (absolute value)	●				
SWF	S00	Reflection of the estimated information of the illuminant color: OFF	●				
	S01	Reflection of the estimated information of the illuminant color: ON	●				
SWR	***	Estimated value of the illuminant color (relative value)	●				

Note 1: It is necessary to turn off the power for reflecting the setting change.

Command Name		Function	Active U-com		Last Memory	Effective only in Factory mode	Remarks
			MDU	MTB			
S							
SZM	S00	Setting the screen size to Dot by Dot		●	MAIN		
	S01	Setting the screen size to 4 :3		●	MAIN		
	S02	Setting the screen size to FULL or FULL 1080i		●	MAIN		
	S03	Setting the screen size to ZOOM		●	MAIN		
	S04	Setting the screen size to CINEMA		●	MAIN		
	S05	Setting the screen size to WIDE or WIDE1		●	MAIN		
	S11	Setting the screen size to AUTO		●	MAIN		
	S12	Setting the screen size to WIDE1		●	MAIN		
T							
TBS	S00	TRUBASS: OFF		●			
	S01	TRUBASS: TRUBASS1		●			
	S02	TRUBASS: TRUBASS2		●			
	S03	TRUBASS: TRUBASS3		●			
THS	S00	Theater port interlock operation OFF	●				
	S01	Theater port interlock operation ON	●				
U							
UAJ		Determining the flag for the DIGITAL Assy adjustment in "not adjusted"	●		MOD	●	
UP∗		To add ∗ to the adjustment value (∗ = 0 to 9, add 10 with UP0 and set to maximum value with UPF)		●			
V							
V1F	***	Adjustment of the reference value of Vyknofs 1, 2 voltage	●		MOD	●	
V3F	***	Adjustment of the reference value of Vyknofs 3 voltage	●		MOD	●	
V4F	***	Adjustment of the reference value of Vyknofs 4 voltage	●		MOD	●	
VFQ	S02	Setting the frequency in Mask mode to VD-50 Hz	●		MOD	●	
	S03	Setting the frequency in Mask mode to VD-60 Hz	●		MOD	●	
	S05	Setting the frequency in Mask mode to VD-72 Hz	●		MOD	●	
	S06	Setting the frequency in Mask mode to VD-75 Hz-1	●		MOD	●	
	S07	Setting the frequency in Mask mode to VD-75 Hz-2	●		MOD	●	
	S13	Setting the frequency in Mask mode to PC-60 Hz	●		MOD	●	
VOF	***	Adjustment of the reference value of Vysnofs voltage	●		MOD	●	
VOL	UP∗, DW∗, ***	To adjust the volume		●			Note 4
VRP	***	Adjustment of the reference value of Vyprst voltage	●		MOD	●	
VSU	***	Adjustment of the reference value of Vsus voltage	●		MOD	●	
VX1	***	Adjustment of the reference value of Vxpofs1 voltage	●		MOD	●	
VX2	***	Adjustment of the reference value of Vxpofs2 voltage	●		MOD	●	
VYF	***	Adjustment of the reference value of Δ Vyknofs1, 2/3/4 voltage	●		MOD	●	
W							
WBI	S00	Panel WB standard output mode: OFF	●			●	
	S01	Panel WB standard output mode: ON	●			●	
X							
X1B	***	3SF and later-first XSUS (resonance up width)	●		MOD	●	
X3B	***	2SF-third XSUS (resonance up width)	●		MOD	●	
XSB	***	2SF-repeat XSUS (resonance up width)	●		MOD	●	

Note 4: Use this command by designating the adjustment value *** (=000 to 060).

Command Name		Function	Active U-com		Last Memory	Effective only in Factory mode	Remarks
			MDU	MTB			
Y							
Y1K	***	1SF-YSUS-Tail (wedge width)	●		MOD	●	
Y1Z	***	1SF-YSUS-Tail (resonance down width)	●		MOD	●	
Y2B	***	2SF-second YSUS (resonance up width)	●		MOD	●	
Y2K	***	2SF-YSUS-Tail (wedge width)	●		MOD	●	
Y2Z	***	2SF-YSUS-Tail (resonance down width)	●		MOD	●	
YNK	***	3SF and later (SSF 2 pulses)-YSUS Tail (wedge width)	●		MOD	●	
YTK	***	3SF and later-YSUS Tail (wedge width)	●		MOD	●	
YTZ	***	3SF and later-YSUS Tail (resonance down width)	●		MOD	●	
YSB	***	2SF-repeat YSUS (resonance up width)	●		MOD	●	
Z							
ZME	***	Initializing the video EEPROM data of the MTB/MR side		●		●	

5.9 DETAILS OF EACH COMMANDS

[1] QS1 (PANEL STATUS)

Model information and version information are returned.

Command Format	Effective Operation Modes	Function	Remarks
[QS1]	Every Time	Output of status	Return data: 3 (ECO) + 112 (DATA) + 2 (CS) = 117 Byte

Data Arrangement		Data Length	Output Example
ECO		3 byte	QS1
1	Resolution/Size	1 byte	F
2	Panel Generation	1 byte	9
3	Destination	1 byte	*
4	Grade	1 byte	*
5	Panel Product Form	1 byte	A
6	Boot version of Module microcomputer	3 byte	-01A
7	Program version of Module microcomputer	8 byte	-01A‘‘‘‘
8	Boot version of sequence processor	3 byte	-01Z
9	Program version of sequence processor	8 byte	-01Z‘‘‘‘
10	Panel information	8 byte	G9_50F_2
11	Derivative operation identification	1 byte	*
12	Reserved (panel section)	7 byte	*******
13	, (comma)	1 byte	,
14	MTB generation	1 byte	9
15	MTB destination	1 byte	A
16	MTB grade	1 byte	H
17	MTB product form	1 byte	B
18	Program version of IF microcomputer	8 byte	-01A
19	Boot version of IF microcomputer	4 byte	01A
20	Program version of Main microcomputer	8 byte	-01A
21	Boot version of Main microcomputer	4 byte	01A
22	Common version of ASIC	8 byte	-01A
23	Boot version of ASIC	8 byte	01A
24	PRS version of ASIC	8 byte	-01A
25	PIC version of ASIC	8 byte	-01A
26	Common version of the Digital Tuner	8 byte	-0A
27	Boot version of the Digital Tuner	4 byte	01A
CS	2 Byte	2 byte	4A

11: Derivative Operation Identification	
*	Standard model operation
1	Derivative model operation

14: MTB Generation	
9	G9

15: MTB Destination	
A	North America
C	China
E	Europe
G	General
J	Japan
U	Australia

16: MTB Grade	
H	Elite/One body Europe HD /System Europe HD/One body Australia
T	Regular/One body Europe SD
D	Derivative Model
*	No Grade (Japan/General/China)

17: MTB Product Form	
B	One body model
S	System model

1: Resolution/Size	
F	50-FHD (1920*1080)
G	60-FHD (1920*1080)

2: Panel Generation	
9	G9

3: Destination	
*	Commonness

4: Grade	
*	Commonness
Z	Evaluation

5: Panel Product Form	
A	One body/monitor model
S	System model

10: Panel Information (8 Byte)		
1 to 2nd byte	G9	Generation information
4 to 5th byte	50	50 inch
	60	60 inch
6th byte	F	FHD
8th byte	3	50 inch 2nd PLANT (Reserved)
	2	50 inch 2nd PLANT
	1	50 inch 1st PLANT
	‘	Others

‘ = space

[2] QS2 (PANEL OPERATION DATA)

The command QS2 is for acquiring data on the panel's operational information.

Command Format	Effective Operation Modes	Function	Remarks
[QS2]	Every Time	Output of status	Return data: 3 (ECO) + 34 (DATA) + 2 (CS) = 39 Byte

Data Arrangement		Data Length	Output Example
ECO		3 byte	QS2
1	Notify of the standby operation transition	1 byte	1
2	Adjustment flag of the main unit	1 byte	0
3	Adjustment-data backup flag	1 byte	0
4	"1st PD" data	1 byte	0
5	"2nd PD" data	1 byte	0
6	Color sensor data	1 byte	0
7	Reserved	2 byte	**
8	Temperature data (TEMP 1)	3 byte	128
9	SD data	1 byte	0
10	SD subcategory data	1 byte	0
11	Operation status induced by SD	1 byte	0
12	Reserved	3 byte	***
13	HOUR METER	8 byte	00000259
14	MASK indication	1 byte	0
15	Still picture detection	1 byte	0
16	SCAN protection detection	1 byte	0
17	Panel crack detection	1 byte	0
18	Address emergency detection	1 byte	0
19	Reserved	4 byte	****
CS	2 Byte	2 byte	4A

1: Power supply status	
P	During power ON
0	Shifting to Passive Standby is not possible.
1	Shifting to Passive Standby is possible.

2: Adjustment flag of the main unit	
0	Adjustment completed
1	Adjustment not completed

3: Adjustment-data backup flag	
0	Adjustment completed
1	Adjustment not completed

4, 5: PD data	
0	No PD data
2	POWER
3	SCAN
4	SCN-5V
6	Y-DCDC
7	Y-SUS
8	ADRS
A	X-DCDC
B	X-SUS
C	DIG-DCDC
F	UNKNOWN

6: Color sensor data	
-	Function OFF (including standby)
0	Normal
1	Hardware connection is not completed
2	Data mismatching

9: SD data	
0	No SD
1	SQ_LSI
2	MDU-DEVICE
3	RST2
4	Panel temperature

10-1: SD subcategory (SQ_LSI)	
0	No SD-Sub data
1	Communication error
2	Drive stop
3	BUSY
4	Version mismatching (H/S)
5	Version mismatching (H/M)
6	Version mismatching (H/I)

10-2: SD subcategory (MDU-DEVICE)	
0	No SD-Sub data
1	EEPROM
2	BACKUP
3	DAC

10-3: SD subcategory (Panel temperature)	
0	No SD-Sub data
1	Panel high temperature
2	Panel low temperature

11: Operation status induced by SD	
0	Normal
1	Relay-off completed
2	During warning indication

14: MASK indication	
0	MASK-OFF
1	MASK-ON

15 to 18: Detection of Each Protection function	
0	Normal operation
1	At detection of protection operation

[3] QS3 (OTHER DATA ON THE PANEL)

The command QS3 is for acquiring data on operational information of the panel.

Command Format	Effective Operation Modes	Function	Remarks
[QS3]	Every Time	Output of status	Return data: 3 (ECO) + 58 (DATA) + 2 (CS) = 63 Byte

Data Arrangement		Data Length	Output Example
ECO		3 byte	QS3
1	SERIAL	15 byte	- - - - - - - - - - - - - - -
2	HOUR METER	8 byte	00000000
3	TOTAL HR METER	8 byte	00000000
4	PON COUNTER	8 byte	00000000
5	Panel temperature (*1)	5 byte	23.5
6	Reserved (TEMP0 acquisition)	5 byte	_ _ _._
7	MAX panel temperature history (*1)	5 byte	78.3
8	Reserved	4 byte	****
CS	2 Byte	2 byte	94

Note
(*1) : Centigrade scale

[4] QS5 (COLOR SENSOR DATA)

The command QS5 is for acquiring the color sensor information.

Command Format	Effective Operation Modes	Function	Remarks
[QS5]	Every Time	Output of status	Return data: 3 (ECO) + 45 (DATA) + 2 (CS) = 50 Byte

Data Arrangement		Data Length	Output Example
ECO		3 byte	QS5
1	Color sensor data (Note)	1 byte	2
2	RED data of color sensor	4 byte	0425
3	GREEN data of color sensor	4 byte	2112
4	BLUE data of color sensor	4 byte	5000
5	Reserved	32 byte	** to **
CS	2 Byte	2 byte	94

Note: The color sensor data is output as the same data as QS2.

[5] QSP (SUB VERSION OF THE PANEL SECTION)

The command QSP is for acquiring sub version data on software of the panel.

Command Format	Effective Operation Modes	Function	Remarks
[QSP]	Every Time	Output of status	Return data: 3 (ECO) + 40 (DATA) + 2 (CS) = 45 Byte

Data Arrangement		Data Length	Output Example
ECO		3 byte	QSP
1	MDUcom-PRG	8 byte	=01Y
2	MDUcom-DATA_TBL	8 byte	=01Y ’’’’
3	SQ_LSI-PRG	4 byte	=01Y
4	SQ_LSI-PIC_TBL	8 byte	=01Y ’’’’
5	SQ_LSI-SEQ_DATA	4 byte	=01Y
6	Reserved	8 byte	********
CS	2 Byte	2 byte	A3

[6] QAJ (PANEL ADJUSTMENT DATA)

The command QAJ is for acquiring the panel's factory-preset data.

Command Format	Effective Operation Modes	Function	Remarks
[QAJ]	Every Time	Output of status	Return data: 3 (ECO) + 84 (DATA) + 2 (CS) = 89 Byte

Data Arrangement		Data Length	Output Example
ECO		3 byte	QAJ
1	Vsus adjustment value	3 byte	128
2	Vysnofs adjustment value	3 byte	128
3	Vyprst adjustment value	3 byte	128
4	Vxpofs1 adjustment value	3 byte	128
5	Vxpofs2 adjustment value	3 byte	128
6	Vyknofs1,2 adjustment value	3 byte	128
7	Vyknofs3 adjustment value	3 byte	128
8	Vyknofs4 adjustment value	3 byte	128
9	∆ Vyknofs1,2/3/4 adjustment value	3 byte	128
10	Reserved	6 byte	******
11	R1K adjustment value	3 byte	128
12	R2K adjustment value	3 byte	128
13	Y1K adjustment value	3 byte	128
14	Y1Z adjustment value	3 byte	128
15	X1B adjustment value	3 byte	128
16	Y2B adjustment value	3 byte	128
17	X3B adjustment value	3 byte	128
18	YSB adjustment value	3 byte	128
19	XSB adjustment value	3 byte	128
20	YTK adjustment value	3 byte	128
21	YTZ adjustment value	3 byte	128
22	Y2K adjustment value	3 byte	128
23	Y2Z adjustment value	3 byte	128
24	YNK adjustment value	3 byte	128
25	SAT adjustment value	3 byte	128
26	Reserved	3 byte	***
27	AM radio countermeasure	1 byte	1
28	Reserved	2 byte	**
CS	2 Byte	2 byte	B7

27: AM radio countermeasure	
n	n: 1 to 8 (SUS frequency n)

[7] QPW (VIDEO ADJUSTMENT DATA OF THE PANEL)

The command QPW is for acquiring the factory-preset data about the video of the panel.

Command Format	Effective Operation Modes	Function	Remarks
[QPW]	Every Time	Output of status	Return data: 3 (ECO) + 40 (DATA) + 2 (CS) = 45 Byte

Data Arrangement		Data Length	Output Example
ECO		3 byte	QPW
1	Type of drive sequence (Note 1)	4 byte	60VS
2	ABL adjustment table	1 byte	1
3	Type of WB adjustment table (Note 1)	1 byte	1
4	ABL adjustment value	3 byte	128
5	R-HIGH adjustment value	3 byte	256
6	G-HIGH adjustment value	3 byte	256
7	B-HIGH adjustment value	3 byte	256
8	R-LOW adjustment value	3 byte	512
9	G-LOW adjustment value	3 byte	512
10	B-LOW adjustment value	3 byte	512
11	R gamma setting	2 byte	31
12	G gamma setting	2 byte	10
13	B gamma setting	2 byte	10
14	Streaking correction	1 byte	1
15	Center luminance correction	1 byte	0
16	Reserved	1 byte	*
17	Interlocked with APL	1 byte	0
18	Transition of protective operations	1 byte	0
19	Reserved	2 byte	**
CS	2 Byte	2 byte	37

1: Type of Drive sequence

50VS	Video 50 Hz
60VS	Video 60 Hz
72VS	Video 72 Hz
75V1	Video 75-1 Hz
75V2	Video 75-2 Hz
60PS	PC 60 Hz

2: ABL adjustment table

n	n: 1 to 3

3: Type of WB adjustment table

n	n: 1 to 4

11, 12, 13: RGB Gamma setting

n	00 to 31

15: Center luminance correction

0	OFF
1	ON
2	ON (interlocked with APL)

17: Interlocked with APL

0	OFF
1	ON
2	WB interlocked ON/γ OFF
3	WB interlocked OFF/γ ON

18: Transition of protective operations

0	Upper limit state for brightness
1	Brightness being reduced
2	Lower limit state for brightness
3	Brightness being increased

Note 1: The "75 Hz-2" Drive Sequence type signals and WB Adjustment Table 4 are output only when "75 Hz-2" (VFQS07) is selected for internal signals (mask signals).
When external signals are selected and the Drive Sequence type is 75 Hz, "75 Hz-1" is output because "75 Hz-1" and "75 Hz-2" are not distinguished for external signals.

[8] QPF (FUNCTION OF THE PANEL)

The command QPF is for acquiring the characteristic and the function setting value of the panel.

Command Format	Effective Operation Modes	Function	Remarks
[QPF]	Every Time	Output of status	Return data: 3 (ECO) + 69 (DATA) + 2 (CS) = 74 Byte

Data Arrangement		Data Length	Output Example
ECO		3 byte	QPF
1	R-REVISE setting value	1 byte	0
2	G-REVISE setting value	1 byte	0
3	B-REVISE setting value	1 byte	0
4	Reserved	3 byte	***
5	ADDRESS L1,L2 setting value	2 byte	01
6	ADDRESS L3,L4 setting value	2 byte	13
7	ADDRESS U1,U2 setting value	2 byte	32
8	ADDRESS U3,U4 setting value	2 byte	30
9	Reserved	4 byte	****
10	Streaking correction	1 byte	1
11	Full-screen black display mode	1 byte	1
12	Reserved	4 byte	****
13	PANEL RX	3 byte	512
14	PANEL RY	3 byte	512
15	PANEL GX	3 byte	512
16	PANEL GY	3 byte	512
17	PANEL BX	3 byte	512
18	PANEL BY	3 byte	512
19	Reserved	6 byte	******
20	Color sensor R coefficient	3 byte	***
21	Color sensor G coefficient	3 byte	***
22	Color sensor B coefficient	3 byte	***
23	Reserved	12 byte	** to **
CS	2 Byte	2 byte	37

1: 2: 3: RGB-REVISE setting value	
n	n: 0 to 7 (Level n)

5 to 8: ADDRESS α, β setting	
nm	n: 0 to 9 (Address α setting PHASE n)
	m: 0 to 9 (Address β setting PHASE m)

10: Streaking correction	
0	OFF
n	n: 1 to 8 (Mode n)

11: Full-screen black display mode	
0	OFF (In-phase SUS drive prohibition)
1	MODE1 (In-phase SUS drive permission)

[9] QPM (PULSE METER VALUE)

The command QPM is for acquiring the accumulated pulse count.

Command Format	Effective Operation Modes	Function	Remarks
[QPM]	Every Time	Output of status	Return data: 3 (ECO) + 40 (DATA) + 2 (CS) = 45 Byte

Data Arrangement		Data Length	Output Example
ECO		3 byte	QPM
1	Pulse meter B 1	8 byte	00000000
2	Pulse meter B 2	8 byte	00000000
3	Pulse meter B 3	8 byte	00000000
4	Pulse meter B 4	8 byte	00000000
5	Pulse meter B 5	8 byte	00000000
CS	2 Byte	2 byte	E7

Note:
The minimum for a returned value of the pulse meter for each block (B1-B2) is one million.

[10] QPD (POWER DOWN LOGS)

The command QPD is for acquiring data from the 8 latest power-down (PD) logs.

Command Format	Effective Operation Modes	Function	Remarks
[QPD]	Every Time	Output of status	Return data: 3 (ECO) + 80 (DATA) + 2 (CS) = 85 Byte

Data Arrangement		Data Length	Output Example
ECO		3 byte	QPD
1	Latest "1st PD" data	1 byte	A
2	Latest "2nd PD" data	1 byte	2
3	Data from the hour meter for the latest PD	8 byte	00010020
4	Second latest "1st PD" data	1 byte	E
5	Second latest "2nd PD" data	1 byte	9
6	Data from the hour meter for the second latest PD	8 byte	00008523
7	Third latest "1st PD" data	1 byte	4
8	Third latest "2nd PD" data	1 byte	3
9	Data from the hour meter for the third latest PD	8 byte	00004335
10	Fourth latest "1st PD" data	1 byte	2
11	Fourth latest "2nd PD" data	1 byte	0
12	Data from the hour meter for the fourth latest PD	8 byte	00000945
13	Fifth latest "1st PD" data	1 byte	4
14	Fifth latest "2nd PD" data	1 byte	0
15	Data from the hour meter for the fifth latest PD	8 byte	00000715
16	Sixth latest "1st PD" data	1 byte	A
17	Sixth latest "2nd PD" data	1 byte	2
18	Data from the hour meter for the sixth latest PD	8 byte	00000552
19	Seventh latest "1st PD" data	1 byte	A
20	Seventh latest "2nd PD" data	1 byte	0
21	Data from the hour meter for the seventh latest PD	8 byte	00000213
22	Eighth latest "1st PD" data	1 byte	D
23	Eighth latest "2nd PD" data	1 byte	0
24	Data from the hour meter for the eighth latest PD	8 byte	000001A7
CS	2 Byte	2 byte	27

• PD data	
0	No PD
2	P-POWER
3	SCAN
4	SCN-5V
6	Y-DCDC
7	Y-SUS
8	Address
A	X-DCDC
B	X-SUS
C	DIGI-DCDC
F	UNKNOWN

[11] QSD (SHUTDOWN LOGS of the Panel Section)

The command QSD is for acquiring the data from the 8 latest shutdown (SD) logs of the panel section.

Command Format	Effective Operation Modes	Function	Remarks
[QSD]	Every Time	Output of status	Return data: 3 (ECO) + 80 (DATA) + 2 (CS) = 85 Byte

Data Arrangement		Data Length	Output Example
ECO		3 byte	QSD
1	Latest SD data	1 byte	1
2	Latest SD subcategory data	1 byte	0
3	Data from the hour meter for the latest SD	8 byte	00752013
4	Second latest SD data	1 byte	5
5	Second latest SD subcategory data	1 byte	0
6	Data from the hour meter for the second latest SD	8 byte	00495204
7	Third latest SD data	1 byte	2
8	Third latest SD subcategory data	1 byte	3
9	Data from the hour meter for the third latest SD	8 byte	00100355
10	Fourth latest SD data	1 byte	2
11	Fourth latest SD subcategory data	1 byte	5
12	Data from the hour meter for the fourth latest SD	8 byte	00075620
13	Fifth latest SD data	1 byte	1
14	Fifth latest SD subcategory data	1 byte	0
15	Data from the hour meter for the fifth latest SD	8 byte	00000852
16	Sixth latest SD data	1 byte	2
17	Sixth latest SD subcategory data	1 byte	2
18	Data from the hour meter for the sixth latest SD	8 byte	00000451
19	Seventh latest SD data	1 byte	0
20	Seventh latest SD subcategory data	1 byte	0
21	Data from the hour meter for the seventh latest SD	8 byte	00000000
22	Eighth latest SD data	1 byte	0
23	Eighth latest SD subcategory data	1 byte	0
24	Data from the hour meter for the eighth latest SD	8 byte	00000000
CS	2 Byte	2 Byte	7D

• SD data

0	No SD
1	SQ_LSI
2	MDU-DEVICE
3	RST2
4	Panel temperature

• SD subcategory (SQ_LSI)

0	No SD-Sub data
1	Communication error
2	Drive stop
3	BUSY
4	Version mismatching (H/S)
5	Version mismatching (H/M)
6	Version mismatching (H/I)

• SD subcategory (MDU-DEVICE)

0	No SD-Sub data
1	EEPROM
2	BACKUP
3	DAC

• SD subcategory (Panel temperature)

0	No SD-Sub data
1	TEMP1 (high temperature)
2	TEMP1 (low temperature)

[12] QSE (DESTINATION PECULIAR INFORMATION)

Induce it peculiar, individual information is acquired.

Command Format	Effective Operation Modes	Function	Remarks
[QSE]	Every time	Output of status	Return data: 3 (ECO) + 28 (DATA) + 2 (CS) = 33 Byte

Data Arrangement		Data Length	Output Example
ECO		3 byte	QSE
1	Check flag for production	1 byte	E
2	Reserved	3 byte	****
3	DTB HARDWARE version	4 byte	0342
4	Reserved	16 byte	**********
5	User setting password	4 byte	1234
CS	Check Sum	2 byte	13

[13] QMT (STATUS INFORMATION OF MTB/MR SECTION)

Temperature information / FAN rotation state / Room light sensor information on the MTB/MR section is acquired.

Command Format	Effective Operation Modes	Function	Remarks
[QMT]	Every time	Output of status	Return data: 3 (ECO) + 8 (DATA) = 11 Byte

Data Arrangement		Data Length	Output Example
ECO		3 byte	QMT
1	A/D value of temperature of MTB/MR section	3 byte	276
2	FAN rotating speed of MTB/MR section (0: STOP, 1: LOW, 2: HIGH)	1 byte	1
3	A/D value of room light sensor	3 byte	009
4	Level of room light sensor (Value: 1 to 5)	1 byte	5

* Returned each block.

[14] QNG (SHUTDOWN INFORMATION OF MTB SECTION)

The command QNG is for acquiring the data from the 8 latest shutdown (SD) logs of the MTB section.

Command Format	Effective Operation Modes	Function	Remarks
[QNG]	Every time	To acquire data on the shutdown (NG) logs of MTB side	Return data: 3 (ECO) + 96 (DATA) + 2 (CS) = 101 Byte

Data Arrangement		Data Length	Output Example
ECO		3 byte	QNG
1	Latest SD data	1 byte	1
2	Latest SD subcategory data	1 byte	0
3	Data from the MTB hour meter for the latest SD	7 byte	0752013
4	Reserved	3 byte	000 fixed
5	Second latest SD data	1 byte	5
6	Second latest SD subcategory data	1 byte	1
7	Data from the MTB hour meter for the second latest SD	7 byte	0495204
8	Reserved	3 byte	000 fixed
9	Third latest SD data	1 byte	A
10	Third latest SD subcategory data	1 byte	2
11	Data from the MTB hour meter for the third latest SD	7 byte	0365814
12	Reserved	3 byte	000 fixed
13	Fourth latest SD data	1 byte	5
14	Fourth latest SD subcategory data	1 byte	0
15	Data from the MTB hour meter for the fourth latest SD	7 byte	0256612
16	Reserved	3 byte	000 fixed
17	Fifth latest SD data	1 byte	7
18	Fifth latest SD subcategory data	1 byte	2
19	Data from the MTB hour meter for the fifth latest SD	7 byte	0105628
20	Reserved	3 byte	000 fixed
21	Sixth latest SD data	1 byte	B
22	Sixth latest SD subcategory data	1 byte	0
23	Data from the MTB hour meter for the sixth latest SD	7 byte	0003009
24	Reserved	3 byte	000 fixed
25	Seventh latest SD data	1 byte	C
26	Seventh latest SD subcategory data	1 byte	1
27	Data from the MTB hour meter for the seventh latest SD	7 byte	00002A9
28	Reserved	3 byte	000 fixed
29	Eighth latest SD data	1 byte	C
30	Eighth latest SD subcategory data	1 byte	4
31	Data from the MTB hour meter for the eighth latest SD	7 byte	0000012
32	Reserved	3 byte	000 fixed
CS	2 Byte	2 Byte	7D

< SD Information No. >

Frequency *	Shutdown Factor	Remarks (Operation)
1	Failure of Power Supply of VCC	Immediately Shutdown
5	Shutdown signal from D-Amp. / short-circuit of speaker terminal	Go to No. 5 Subcategory Information
6	Failure of communication with Module microcomputer	Immediately Shutdown
7	Failure in 3-wire serial communication of Main microcomputer	Go to No. 7 Subcategory Information
8	Failure in IIC communication of Main microcomputer	Go to No. 8 Subcategory Information
9	Failure in Communication of Main microcomputer	Immediately Shutdown
10(A)	Abnormally in FAN	Go to No. 10 Subcategory Information
11(B)	Abnormally in high temperature	Immediately Shutdown
12(C)	Failure in Digital Tuner	Go to No. 12 Subcategory Information
13(D)	Failure in Power Supply at MTB section	Go to No. 13 Subcategory Information
15(F)	Failure in Main EEPROM	Immediately Shutdown

∗: Indicates the frequency of Blue LED flashing when the shutdown is occurred.

< No. 5 Subcategory Information on "Shutdown signal from D-Amp./short-circuit of speaker terminal" >

Value	Shutdown Factor	Remarks (Operation)
1	A_NG	Shutdown after 5 seconds warning
2	OTW	Shutdown after 5 seconds warning

< No. 7 Subcategory Information on "Failure in 3-wire serial communication of Main microcomputer" >

Value	Shutdown Factor	Remarks (Operation)
1	Communication error of IF microcomputer	Immediately Shutdown
2	Communication error of ARIA	Immediately Shutdown

< No. 8 Subcategory Information on "Failure in IIC communication of Main microcomputer" >

Value	Shutdown Factor	Remarks (Operation)
1	Tuner 1	Immediately Shutdown
2	MSP/MAP	Immediately Shutdown
3	AV-Switch	Immediately Shutdown
4	RGB-Switch	Immediately Shutdown
5	Main VDEC	Immediately Shutdown
6	VDEC-SDRAM	Immediately Shutdown
7	AD/PLL	Immediately Shutdown
8	HDMI	Immediately Shutdown
9	DisplayPortTx	Immediately Shutdown
B	US-MAP	Immediately Shutdown
C	GCR	Immediately Shutdown
D	COFDEM	Immediately Shutdown

< No. 10 Subcategory Information on "Abnormally in FAN" >

Value	Shutdown Factor	Remarks (Operation)
1	FAN 1	Immediately Shutdown
2	FAN 2	Immediately Shutdown

< No. 12 Subcategory Information on "Failure in Digital Tuner" >

Value	Shutdown Factor	Remarks (Operation)
1	Starting error of the digital tuner	Communication stop
2	Communication error with the digital tuner	
3	DTB device error	
4	Abnormmally in BCM7038	
5	Fugue	
6	Audio Chip	
7	Tuner 1/Tuner 1 or 2	
8	Card I/F IC	
9	VBI Slicer	
B	Flash	
C	EEPROM	
D	EEPROM	
F	DTV Antenna	
G	Home Gallery	
I	Application	
J	DEMOD(US)/COFDEM(EU)	
K	Tuner 2	
L	S2DEMOD	
M	LNB	

< No. 13 Subcategory Information on "Failure in Power supply at MTB section" >

Value	Shutdown Factor	Remarks (Operation)
1	RST 2	Immediately Shutdown
2	RST 4	Immediately Shutdown

[15] QSI (INPUT SIGNAL DATA)

The command QSI is for acquiring all data on input video signals.

Command Format	Effective Operation Modes	Function	Remarks
[QSI]	Every Time	Output of status	Return data: 3 (ECO) + 66 (DATA) + 2 (CS) = 71 Byte

Data Arrangement		Data Length	Output Example
ECO		3 Byte	QSI
1	Type of drive sequence (Note)	4 Byte	60VS
2	Type of ABL adjustment table (Note)	1 Byte	1
3	Type of WB adjustment table (Note)	1 Byte	1
4	Reserved	4 Byte	****
5	Total value of PRH	4 Byte	0256
6	Total value of PGH	4 Byte	0256
7	Total value of PBH	4 Byte	0256
8	Reserved	4 Byte	****
9	Total value of PRL	4 Byte	0512
10	Total value of PGL	4 Byte	0512
11	Total value of PBL	4 Byte	0512
12	Total value of ABL	3 Byte	128
13	V frequency distinction	4 Byte	6002
14	Reserved	4 Byte	****
15	APL acquiring data	4 Byte	1023
16	Number of SUS pulses	4 Byte	0457
17	Detection status of still picture	1 Byte	1
18	Detection status of cracking in the panel	1 Byte	1
19	Detection status of SCAN protection	1 Byte	1
20	Detection status of external protection	1 Byte	1
21	Transition of protection operations	1 Byte	0
22	Address emergency status	1 Byte	1
23	Detection status of reset operation	1 Byte	1
24	In-phase SUS mode status	1 Byte	1
25	Reserved	1 Byte	1
CS	2 Byte	2 Byte	27

Note: The types of drive sequence and ABL/WB table are output as the same data as QPW.

18 to 20: Each protection function	
0	Setting: OFF
1	Setting: ON (during wait)
2	Setting: ON (during operation)

21: Transition of protection operations	
0	Upper limit status for brightness
1	Brightness being reduced
2	Lower limit status for brightness
3	Brightness being increased

22: Address emergency status	
0	Normal status
1	Emergency status

23: Reset operation status	
A	All reset operation
2	Interlace 1/2 reset operation
4	Interlace 1/4 reset operation
L	Reset less operation (specifications operation)

24: In-phase SUS mode status	
0	Normal status
1	In-phase SUS mode status
2	Assist status at the cancellation

[16] DRV (PANEL DRIVE-POWER ON/OFF)

Panel drive-power ON/OFF (drive ON/OFF) is controllable.

Command Format	Operation		Remarks
	Effective Operation Modes	Function	
[DRV+S00]	Every time	DRIVE OFF	If a command is issued in Standby mode, and the unit is left unoperated for more than 10 seconds, the command will become void.
[DRV+S01]	Every time	DRIVE ON (default)	

Note: The function of the DRIVE OFF key on the remote control unit for servicing is the same as that of the DRVS00 command. (A function equivalent to that of the DRVS01 command is not provided for the remote control unit for servicing.)

[17] FAY/FAN (ADJUSTMENT COMMANDS PERMISSION/PROHIBITION)

The commands FAY/FAN are for prohibiting/permitting panel/MTB-adjustment commands.

Command Format	Operation		Remarks
	Effective Operation Modes	Control	
[FAY]	Normal operation mode while the power is on	Adjustment command is valid.	For details, refer to the section “6.1 [3] FUNCTIONS WHEN ENTERING THE SERVICE FACTORY MODE”.
[FAN]	During FAY	Adjustment command is invalid.	

[18] FAJ/UAJ/CBU/BCP (BACKUP FUNCTION FOR ADJUSTMENT VALUE)

When the DIGITAL Assy is to be replaced, adjustment values can be copied from the backup EEPROM to the EEPROM of the Assy for service.

Command Format	Operation		Remarks
	Effective Operation Modes	Control	
[FAJ]	During FAY	To make the status of the EEPROM on the DIGITAL Assy "adjustment completed" and copy the data to the EEPROM for backup	This takes at least 350 msec.
[UAJ]		To make the status of the EEPROM on the DIGITAL Assy "adjustment not completed"	Only the status is changed, and the real data are not erased.
[CBU]		To make the status of the EEPROM on for backup "adjustment not completed"	Only the status is changed, and the real data are not erased. However, if the status of the EEPROM on the DIGITAL Assy is "adjustment completed," the data in the EEPROM of the DIGITAL Assy will be copied to the EEPROM for backup upon POF.
[BCP]		To copy the backup data from the EEPROM for backup to the EEPROM on the DIGITAL Assy	

6. SERVICE FACTORY MODE
6.1 OUTLINE OF THE SERVICE FACTORY MODE

Operations during Service Factory mode are described here.

[1] SERVICE FACTORY MODE TRANSITION CHART

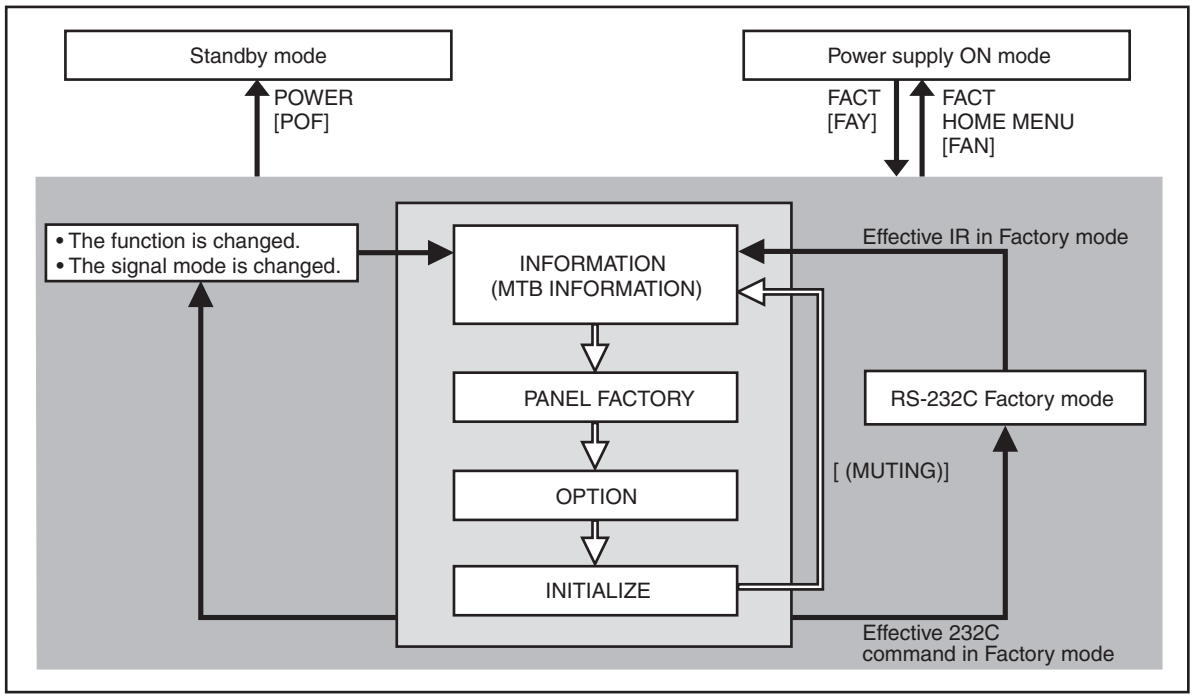

[2] HOW TO ENTER/EXIT SERVICE FACTORY MODE

■ **How to enter Service Factory Mode**

By using a PDP service remote control)
- PDP service remote control : Press [FACTORY] key.

By issuing RS-232C commands)
- During normal Standby mode : Issue [PON] then [FAY].
- During normal operation mode : Issue [FAY].

■ **How to exit Service Factory Mode**

By using a PDP service remote control)
- PDP service remote control : press [FACTORY] key.
- Supplied remote control unit : press [HOME MENU] key.

By issuing RS-232C commands)
- Issue [FAN].

■ **How to enter Service Factory Mode by Using the supplied Remote Control Unit**

- From this model, can not enter the Service Factory Mode by operating the supplied remote control unit keys.

[3] FUNCTIONS WHEN ENTERING THE SERVICE FACTORY MODE

■ Fuctions whose setting are set to OFF

The settings for the following functions are set to OFF when Service Factory mode is entered (including when the “FAY” command is received) :

Function	Remarks
2-Screen Operation	Input function set on the main side is selected.
FREEZE	
Auto size, Side Mask	It is not performed during Factory mode.
ORBITER, Mask control	Central value operation (ORBITER)
Sleep Timer	Cancel the operation.
Room light sensor	Turn off the detecting operation (Setting data will be retained.)
Blue LED dimmer	Turn off the operation (Setting data will be retained.)
Setting of Parental Control	When this is turned off, the block of the screen is released.
Power Control	Turn off the operation (However, the setting maintains it.)
Image Position	Central value operation

Note: Enter the factory after cancelling ACI because the ACI operation setting OFF and not done.

■ User data

User data will be treated as follows :

- User data on picture-quality and audio-quality adjustments are not reflected, and factory-preset data are output (user data will be retained in memory). When the unit enters Service Factory mode, the current audio-quality adjustment data will be still be retained in memory.
- User-setting data will be applied to the various settings (items on the menus), signal formats, and the items that are associated with path change (HDMI settings, etc.).
- Data on screen (i.e., screen position; meaning clock dividers, and not including data on screen size). Are reset to the default values (data stored in memory will be retained). Screen size will be retained.

[4] REMOTE CONTROL CODE IN SERVICE FACTORY MODE

Remote Control Keys	Basic Functions	Remarks
MUTING	Switching the main items.	Shifting to the next main item (top).
⬇ (DOWN)	Switching the subtitled items.	Shifting downward to the next subtitiled item.
⬆ (UP)	Switching the subtitled items.	Shifting upward to the next upper layer.
⬅ (LEFT)	Decreasing the adjustment value.	Decreasing the adjustment value.
➡ (RIGHT)	Increasing the adjustment value.	Increasing the adjustment value.
ENTER/SET	Switching the layers.	Shifting downward or upward to the next lower or upper layer.
INPUT	Selecting INPUT.	Shifting the INPUT to the next function.
INPUTxx	Selecting INPUT.	Switching the INPUT to xx. (xx=1 to 7 etc)
CH+/P+	Increasing the channel number.	
CH-/P-	Decreasing the channel number.	
Numeric Keys	Function: TV	Function: TV (previously selected channel number is selected)
POWER	Power OFF.	Turning the power off.
FACTORY	Factory OFF (Factory mode)	In Factory mode, turning Factory mode off.
	Factory ON (Non-Factory mode).	In Non-Factory mode, turn Fuctory mode on.
HOME MENU	Menu ON.	In Factory mode, turn Factory mode off.
VOLUME+	Volume UP.	Increasing 10 the adjustment value. (PANEL FACTORY)
VOLUME-	Volume DOWN.	Decreasing 10 the adjustment value. (PANEL FACTORY)
DRIVE OFF (Note1)	Drive Mode OFF.	Turning Drive mode off.
INTEGRATOR	INTEGRATOR MENU ON.	Enter INTEGRATOR MODE.

(Note 1) When ten seconds have passed since the [DRIVE OFF] key was pressed at the standby, it becomes invalid. Please press [POWER] key from the [DRIVE OFF] key pressing within ten seconds when you do power supply ON while driven OFF.

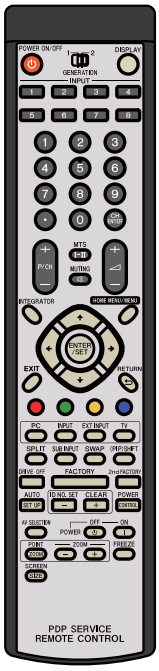

PDP service remote control

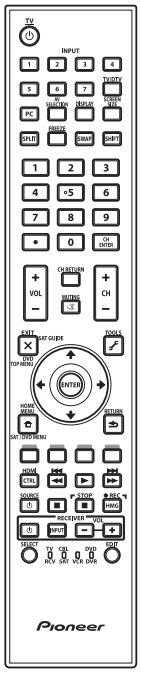

Supplied remote control

[5] PDP SERVICE REMOTE CONTROL

- The keys labeled with the same names on the service remote control unit have the same functions as those of the supplied remote control unit. (See "2.3 PANEL FACILITIES.")
- For the keys not provided on the supplied remote control unit, see the explanations below:

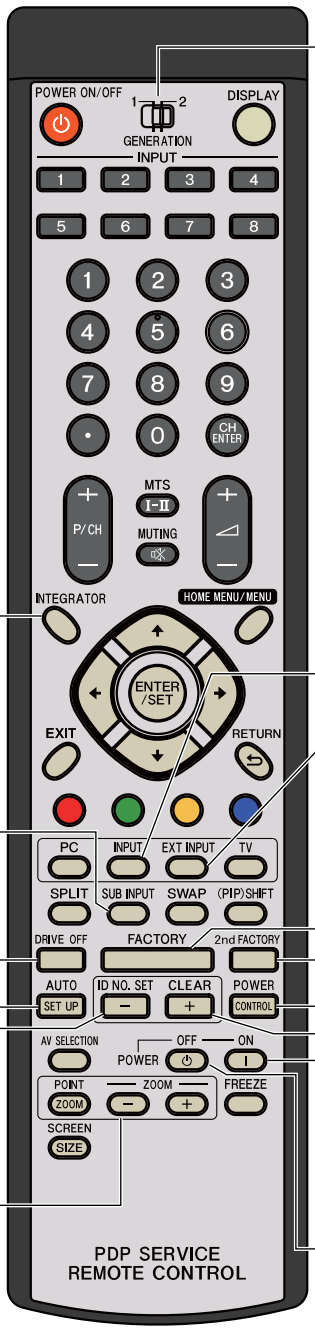

GENERATION switch for remote control codes
This switch selects the generation of remote control codes to be transmitted:
1: The old-generation codes are transmitted.
2: The new-generation codes are transmitted.
With this generation plasma display, set the switch to 2.

INTEGRATOR
Press this key to enter Integrator mode.

INPUT
Press this key to cyclically change the input source.

EXT INPUT
Press this key to cyclically change only the external input source.

SUB INPUT
Not used with this model.

DRIVE OFF
Press this key to turn off the panel drive. For details on how to cancel this command, see the explanation for the DRV command.

FACTORY
Press this key to enter Factory mode.

2nd FACTORY
Not used with this model.

AUTO SETUP
Use this key for automatic setup, such as the display position setting when an analog PC signal is input.

ID NO. SET
Not used with this model.

POWER CONTROL
Not used with this model.

CLEAR
Not used with this model.

POWER ON
Press this key to turn on the unit. This key cannot turn the unit off.

POWER OFF
Press this key to turn off the unit. This key cannot turn the unit on.

POINT ZOOM
Not used with this model.

ZOOM +/-
Not used with this model.

[6] FACTORY HIERARCHICAL TABLE

Large Item	Middle Item	Small Item	Variable / Adjustment Range	Remarks
6.2 [1] INFORMATION				
	[1-1] VERSION (1)			
	[1-2] VERSION (2)			
	[1-3] MAIN NG	CLEAR <=>	NO <=> YES	
	[1-4] TEMPERATURE			
	[1-5] HOUR METER	CLEAR <=>	NO <=> YES	
	[1-6] HDMI SIGNAL INFO 1			
	[1-7] HDMI SIGNAL INFO 2			
	[1-8] VDEC SIGNAL INFO 1			
	[1-9] VDEC SIGNAL INFO 2			
6.2 [2] PANEL FACTORY (+)				
	[2-1] PANEL INFORMATION			
	[2-2] PANEL WORKS			
	[2-3] POWER DOWN			
	[2-4] SHUT DOWN			
	[2-5] PANEL-1 ADJ (+)	VOL SUS <=>	000 to 255	
		VOL OFFSET <=>	000 to 255	
		VOL RST P <=>	000 to 255	
		VOL XPOFS1 <=>	000 to 255	
		VOL XPOFS2 <=>	000 to 255	
		VOL YKNOFS1 D <=>	000 to 255	
		VOL YKNOFS3 D <=>	000 to 255	
		VOL YKNOFS4 D <=>	000 to 255	
		VOL YKNOFSA D <=>	000 to 255	
		RESET1ST_KSB <=>	112 to 144	
		RESET2ND_KSB <=>	112 to 144	
		YSTL_1SF_KSB <=>	112 to 144	
		YSTL_1SF_HZ <=>	112 to 144	
		XSUS_1ST_B <=>	112 to 144	
		YSUS_2ND_B <=>	112 to 144	
		XSUS_3RD_B <=>	112 to 144	
		YSUS_B <=>	112 to 144	
		XSUS_B <=>	112 to 144	
		YSTL_KSB <=>	112 to 144	
		YSTL_HZ <=>	112 to 144	
		YSTL_2SF_KSB <=>	112 to 144	
		YSTL_2SF_HZ <=>	112 to 144	
		YSTL_FMR_KSB <=>	112 to 144	
		SCAN ADRS ADJ <=>	112 to 144	
		SUS FREQ <=>	<=> MODE 1 to MODE 8 <=>	
	[2-6] PANEL-2 ADJ (+)	R-HIGH <=>	000 to 999	
		G-HIGH <=>	000 to 999	
		B-HIGH <=>	000 to 999	
		R-LOW <=>	000 to 999	
		G-LOW <=>	000 to 999	
		B-LOW <=>	000 to 999	
		ABL <=>	000 to 255	
	[2-7] PANEL FUNCTION (+)	R-LEVEL <=>	<=> LV-0 to LV-7 <=>	
		G-LEVEL <=>	<=> LV-0 to LV-7 <=>	
		B-LEVEL <=>	<=> LV-0 to LV-7 <=>	
		ADDRESS L1 <=>	<=> PH0 to PH9 <=>	
		ADDRESS L2 <=>	<=> PH0 to PH9 <=>	
		ADDRESS L3 <=>	<=> PH0 to PH9<=>	
		ADDRESS L4 <=>	<=> PH0 to PH9 <=>	
		ADDRESS U1 <=>	<=> PH0 to PH9 <=>	
		ADDRESS U2 <=>	<=> PH0 to PH9 <=>	
		ADDRESS U3 <=>	<=> PH0 to PH9 <=>	
		ADDRESS U4 <=>	<=> PH0 to PH9<=>	
		STK MODE <=>	OFF <=> MODE1 to MODE8 <=>	
		FULL BLACK <=>	MODE1 <=> OFF	
		PANEL RX <=>	000 to 999	
		PANEL RY <=>	000 to 999	
		PANEL GX <=>	000 to 999	
		PANEL GY <=>	000 to 999	
		PANEL BX <=>	000 to 999	
		PANEL BY <=>	000 to 999	
		CLS R <=>	000 to 255	
		CLS G <=>	000 to 255	
		CLS B <=>	000 to 255	

Large Item	Middle Item	Small Item	Variable / Adjustment Range	Remarks
6.2 [2] PANEL FACTORY (+)				
	[2-8] ETC. (+)	BACKUP DATA <=>	NO OPRT <=> TRANSFER/ERR	
		DIGITAL EEPROM <=>	NO OPRT <=> DELETE/REPAIR	
		PD INFO. <=>	NO OPRT <=> CLEAR	
		SD INFO. <=>	NO OPRT <=> CLEAR	
		HR-MTR INFO. <=>	NO OPRT <=> CLEAR	
		PM/B1-B5 <=>	NO OPRT <=> CLEAR	
		P COUNT INFO. <=>	NO OPRT <=> CLEAR	
		MAX TEMP. <=>	NO OPRT <=> CLEAR	
		MIRROR <=>	OFF <=> MODE1 to MODE3 <=>	
		CLS <=>	OFF <=> ON	
	[2-9] RASTER MASK SETUP (+)	MASK OFF	<=> 50V <=> 60V <=> 60P <=> 72V <=> 75V1 <=> 75V2 <=>	
		RST MASK 01 <=>		
		• • •		
		RST MASK 25 <=>		
	[2-10] PATTERN MASK SETUP (+)	MASK OFF	<=> 50V <=> 60V <=> 60P <=> 72V <=> 75V1 <=> 75V2 <=>	
		PTN MASK 01 <=>		
		• • •		
		PTN MASK 49 <=>		
	[2-11] COMBI MASK SETUP (+)	MASK OFF	<=> 50V <=> 60V <=> 60P <=> 72V <=> 75V1 <=> 75V2 <=>	
		CMB MASK 01 <=>		
		• • •		
		CMB MASK 17 <=>		
6.2 [3] OPTION				
	[3-1] CH PRESET <=>		DISABLE <=> ENABLE	Exclusively used for production line
	[3-2] ANTENNA MODE <=>		CABLE <=> AIR	
	[3-3] AFT <=>		DISABLE <=> ENABLE	
	[3-4] SYNC DET (+)			for the technical analysis
	[3-5] CTI (+)			for the technical analysis
	[3-6] CC (+)			for the technical analysis
6.2 [4] INITIALIZE				
	[4-1] SIDE MASK LEVEL (+)	SIDE MASK LEVEL <=>		
	[4-2] FINAL SETUP (+)	DATA RESET <=>	NO <=> YES	
	[4-3] DTB SERVICE MODE (+)	MODE SHIFT <=>	NO <=> YES	for the technical analysis (*1)
	[4-4] Wide XGA AUTO <=>		DISABLE <=> ENABLE	for the technical analysis
	[4-5] AUTO ADJUSTMENT (+)	AUTO ADJUST. <=>	NO <=> YES	

(*1): Exit the Service Factory Menu and enter the Digital Tuner Service menu.

[7] INDICATIONS IN SERVICE FACTORY MODE

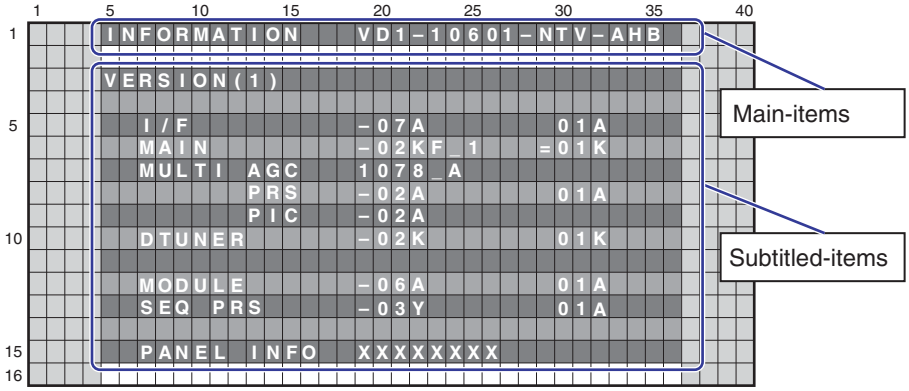

■ Main-item indications

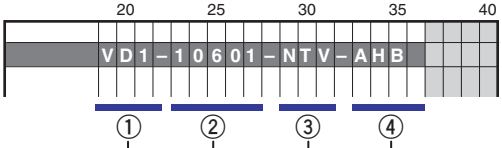

① Input function

Input Functions	OSD
VIDEO 1 to 7	VD 1 to 7
Terrestrial Wave (Analog)	AIR
Cable (Analog)	CBL
Terrestrial Wave (Digital)	ARD
Cable (Digital)	CBD
Home Media Gallery	HMG
PC	PC

② SIG mode and Screen size

Note: See SIG-Mode Tables. (See next page.)

③ Color system and Signal type

Color System and Signal Type		OSD
NTSC	Composite input	NTV
	S-connector input	NTS
Y/CB/CR		CBR
Y/PB/PR		PBR
RGB		RGB
Digital Video signal		DIG

④ Option (Destination, Panel Generation, etc.)

Options	OSD
ELITE: PRO-151/111FD	AHB
Regular: PDP-5020/6020FD	ATB

② SIG Mode and Screen size (by User is displayed)

1st and 2nd characters : Resolution of the input signal
3rd and 4th characters : Refresh rate of the input signal
5th character : Selection of the screen size

■ Input signal mode table for video signals (resolutions and V frequencies)

1st to 4th Character		Signal Type	Fv (Hz)	Fh (kHz)
10	60	SDTV*525i	60.000	15.750
20	60	SDTV*525p	60.000	31.500
30	60	HDTV*1125i	60.000	33.750
40	60	HDTV*750p	60.000	45.000
50	24	HDTV*1125p	24.000	27.000
50	60	HDTV*1125p	60.000	67.500

Fv: Vertical Frequency, Fh: Horizontal Frequency

■ Input signal mode table for PC signals (resolutions and V frequencies)

1st to 4th Character		Signal Type	Fv (Hz)	Fh (kHz)
C1	70	720 x 400	70.087	31.469
C2	60	640 x 480	59.940	31.469
C4	60	800 x 600	60.317	37.879
C6	60	1280 x 720	60.000	44.800
C7	60	1024 x 768	60.004	48.363
C9	60	1360 x 768	60.015	47.712
D6	60	1280 x 1024	60.000	64.000

Fv: Vertical Frequency, Fh: Horizontal Frequency

■ Current selection of the screen size

5th Character	GUI Notation	VIDEO	PC
0	DOT	●	–
1	4:3	●	●
2	FULL	●	●
3	ZOOM	●	–
4	CINEMA	●	–
5	WIDE	●	–
9	WIDE1	●	–
A	WIDE2	●	–

●: supported, –: unsupported

6.2 DETAILS OF FACTORY MENU

[1] INFORMATION

■ **Operation items**

No.	Function	Content	RS-232C Command
[1-1]	VERSION (1)	The Flash memory versions for each device are displayed.	QS1
[1-2]	VERSION (2)	The Flash memory versions for each device are displayed.	QSE
[1-3]	MAIN NG	The Shutdown NG information and Event Times in the MTB section are displayed.	QNG
[1-4]	TEMPERATURE	The present temperature and the FAN rotating status are displayed.	–
[1-5]	HOUR METER	The accumulation power ON count of the panel is displayed.	–
[1-6]	HDMI SIGNAL INFO 1	The status registers of HDMI receiver are displayed with hexadecimal.	–
[1-7]	HDMI SIGNAL INFO 2		
[1-8]	VDEC SIGNAL INFO 1	Display the signal information input to VDEC.	–
[1-9]	VDEC SIGNAL INFO 2		

[1-1] VERSION (1)

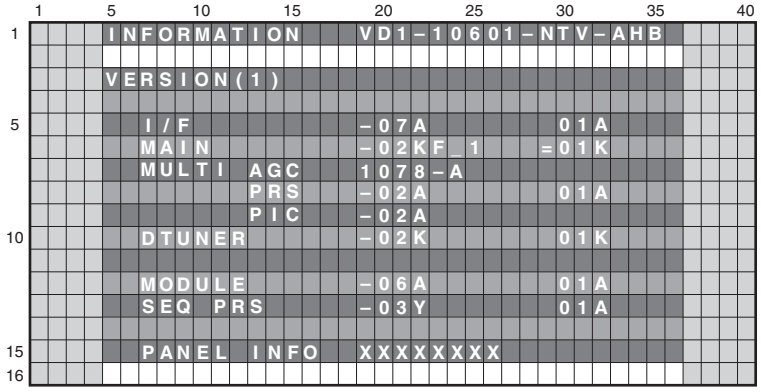

Display Item	Meaning	Display Example (Program)	Display Example (Boot)
I/F	I/F microcomputer	-07A	01A
MAIN	Main microcomputer	-02KF_1	=01K
MULTI AGC	AGC data of Multi processor	1078-A	
MULTI PRS	Program of Multi processor	-02A	01A
MULTI PIC	Picture quality data of Multi processor	-02A	
DTUNER	Software program of the Digital tuner	-02K	01K
MODULE	Module microcomputer	-06A	01A
SEQ PRS	Program of Sequence processor	-03Y	01A
Display Item	**Meaning**		
PANEL INFO	It displays the generation of the panel, inchage and the type of the panel. For details on display values and settings, see "10: Panel Information" in "5.9 [1] QS1 (PANEL STATUS)."		

[1-2] VERSION (2)

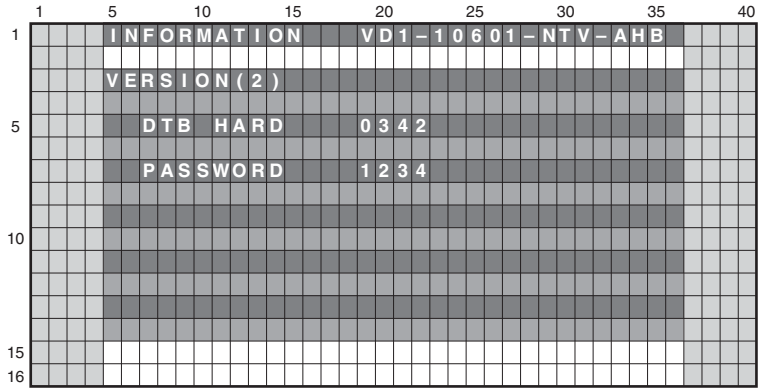

Display Item	Meaning	Display Example
DTB HARD	DTB Hardware Version	0342
PASSWORD	User setting password	1234

[1-3] MAIN NG

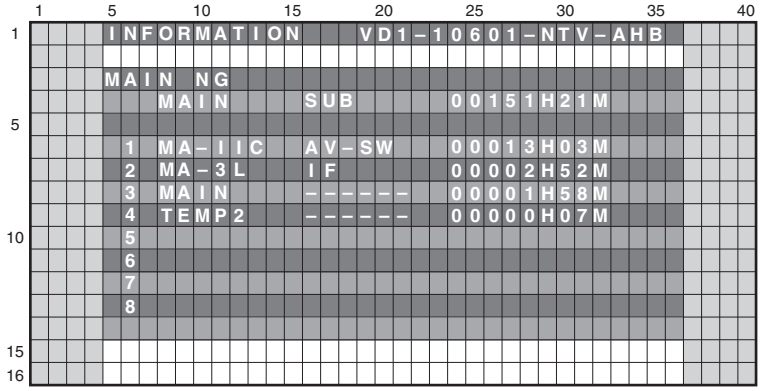

MTB side's Shutdown NG information

Error Display: MAIN	Error Display: SUB	Cause of Shutdown
AUDIO		Short-circuit of the speaker terminal or failure of audio amplifier.
	AUDIO	Short-circuit of the speaker terminal or failure signal of audio amplifier (MAIN)
	OTW	Short-circuit of the speaker terminal or failure signal of audio amplifier (IF)
MODULE	----	Serial communication error of Module microcomputer.
MA-3L		3-wire Serial Communication error of Main microcomputer.
	IF	Communication error of IF microcomputer
	MULTI	Main communication error of Multi Processor
MA-IIC		IIC Communication error of Main microcomputer
	FE1	Tuner 1
	MSPMAP	MSP/MAP
	AV-SW	AV Switch
	RGB-SW	RGB Switch
	VDEC	Main VDEC
	SDRAM	VDEC - SDRAM
	ADC	AD/PLL
	HDMI	HDMI
	US-MAP	US-MAP
MAIN	----	Communication error of Main microcomputer
FAN		FAN abnormal
	FAN2	FAN2 abnormal stop
TEMP2	----	Abnormally high temperature
DTUNER		Failure in Digital Tuner
	PS/RST	DTB Starting error
	RETRY	Communication error with DTB
	DEVICE	DTB device error
	DE-FE	DTB device error (Tuner 1)
	DTVAPP	DTB device error (Application)
	DEMOD	DTB device error (DEMOD)
RST-MA		Abnormally in MTB power
	M-DCDC	Abnormally in ASIC power (DC-DC)
	RELAY	Power decrease of RELAY power
MA-EEP	----	Main EEPROM communication error

• **Clear the MAIN NG history**

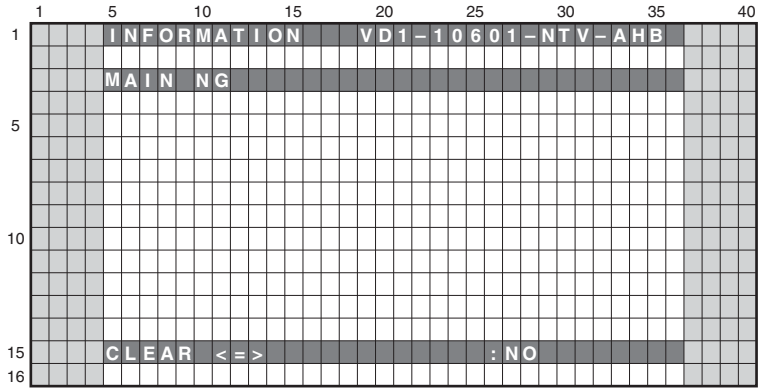

Operation:

- Even if [⬅] key or [➡] key is pressed, {CLEAR <=> :YES} ⇔ {CLEAR <=> :NO} is repeated.
- Selecting <NO> then pressing the ENTER/SET key will return the screen to the next higher layer, without doing anything.
- Selecting <YES> then holding the ENTER/SET key pressed for 5 seconds will clear the NG log data that are managed in MTB then return the screen to the next higher layer.

[1-4] TEMPERATURE

A present temperature and the FAN rotation are displayed.
If either [⬅] key or [➡] key is pressed, the display data is refreshed.

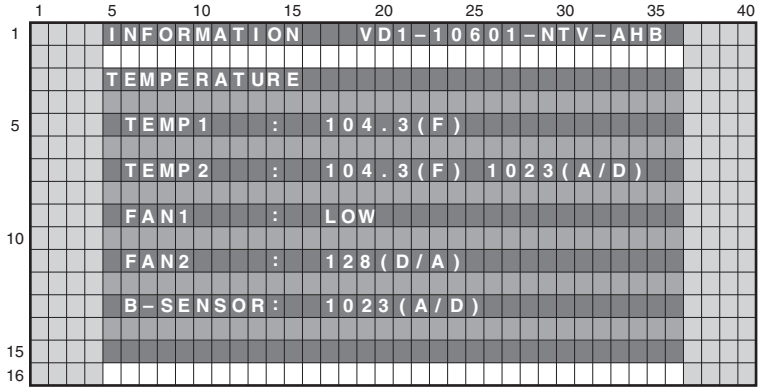

Display Item	Meaning
TEMP1	The temperature of the sensor on the panel side is displayed by the Fahrenheit (F).
TEMP2	The temperature conversion display is done with 10 bit the A/D input value of IF microcomputer. It is displayed by both the Fahrenheit (F) and 8 bit A/D value. Note: When temperature (F) of the sensor becomes more than a specified temperature, the shutdown start of processing.
FAN1	The value of the FAN rotating state is displayed. STOP: stopped, LOW: slow speed, HIGH: high speed.
FAN2	The value of the rotation state of FAN is displayed. During a rotation of FAN, 8bit D/A value output from IF microcomputer is displayed. It is displayed with OFF during a stop.
B-SENSOR	The value that indicated the degree of brightness input into an Room light sensor is displayed. AD value when the output of the Room light sensor was input into IF microcomputer is displayed.

[1-5] HOUR METER

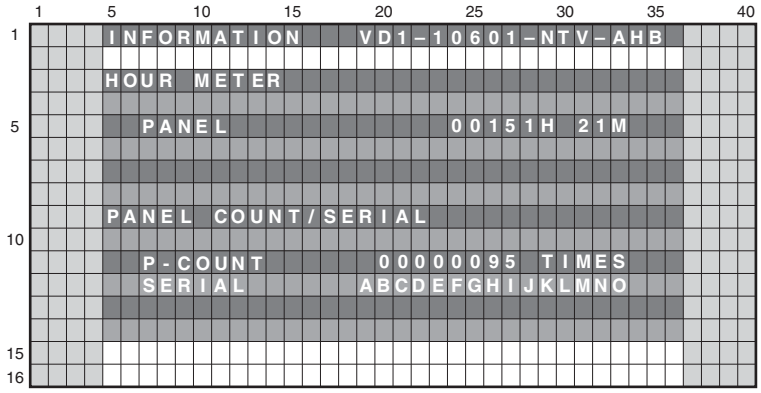

Display Item	Meaning	Display Example
PANEL	HOUR METER of the panel	00151H 21M
P-COUNT	Accumulation power ON count of the panel	00000095 TIMES
SERIAL	Serial number of the product	ABCDEFGHIJKLMNO

• MTB HOUR METER

In HOUR METER screen on Factory Menu, press the [ENTER/SET] key, and then it moves to the screen to clear MTB HOUR METER. (MTB HOUR METER is cleared only.)

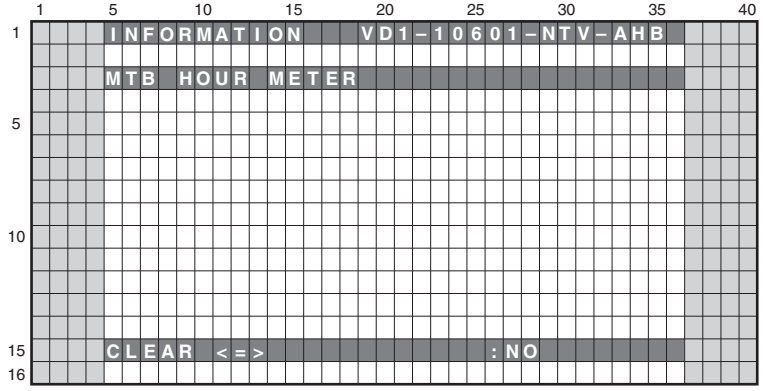

Operation:

- Even if [⬅] key or [➡] key is pressed, {CLEAR <=> :YES} ⇔ {CLEAR <=> :NO} is repeated.
- Selecting <NO> then pressing the ENTER/SET key will return the screen to the next higher layer, without doing anything.
- Selecting <YES> then holding the ENTER/SET key pressed for 5 seconds will clear the HOUR METER (HOUR METER while the MAIN NG screen is displaed) data that are managed in MTB then return the screen to the next higher layer.

[1-6] HDMI SIGNAL INFO 1

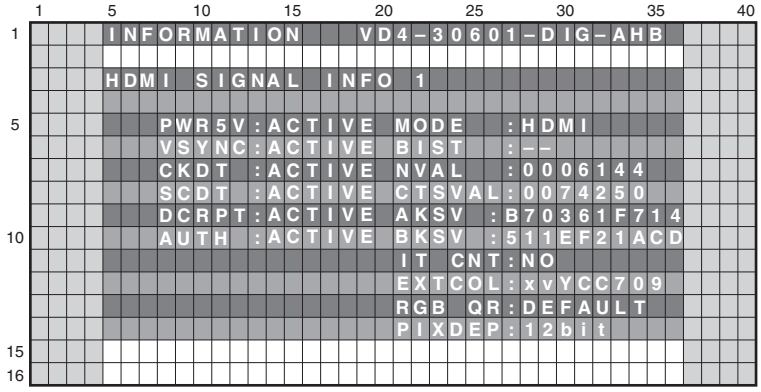

Displays the input signal information of HDMI terminal

Display Item	Meaning
PWR5V	+5 V power detection (18 pin of HDMI terminal)
VSYNC	VSYNC detection
CKDT	Clock detection
SCDT	SYNC detection
DCRPT	HDCP decryption status
AUTHEN	HDCP authentication status
MODE	HDMI mode status
BIST	HDCP Key status (Always display it with "--".)
NVAL	N value
CTSVAL	CTS value
AKSV	Shadow AKSV value
BKSV	Shadow BKSV value
IT CNT	IT content (AVI info)
EXTCOL	Extension calorimetry (AVI info)
RGV QR	RGB range (AVI info)
PIXDEP	Number of pixel/bit

[1-7] HDMI SIGNAL INFO 2

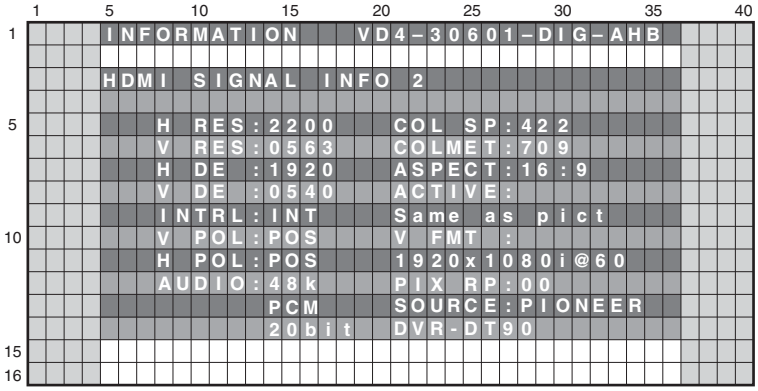

Displays input signal status of HDMI terminal

Display Item	Meaning
H RES	Number of horizontal pixels
V RES	Number of vertical lines
H DE	Number of effectively horizontal pixels
V DE	Number of effectively vertical lines
INTRL	Interlace (=INT) or progressive (=PRG)
V POL	VSYNC polarity
H POL	HSYNC polarity
AUDIO (first line)	Sampling frequency. (ex. DVD: 48kHz, CD: 44.1kHz) *1
AUDIO (second line)	Audio format PCM (PCM) or No PCM (no PCM)
AUDIO (third line)	Quantization bit
COL SP	Color space (AVI Info) 422 or 444 or RGB *2
COLMET	Calorimetry (AVI Info)
ASPECT	Aspect (AVI Info)
ACTIVE	Active format (AVI Info)
V FMT	Video format (AVI Info)
PIX RP	Pixel count
SOURCE (first line)	Vendor name of the emission device
SOURCE (second line)	Model name of the emission device

*1: Confirm if this item is displayed when the audio is not outputted.
*2: If may not match to the state of source devices when the color is abnormal.

Display of HDMI FACTORY and correspondence of resolution
Please confirm the following items when the picture doesn't come out.

Input Signal	FACTORY Display				
	H RES	V RES	H DE	V DE	V FMT
480i (525i)@60	858	262 or 263	720	240	720x480i@60
480p (525p)@60	858	525	720	480	720x480p@60
1080i (1125i)@60	2200	562 or 563	1920	540	1920x1080i@60
720p (750p)@60	1650	750	1280	720	1280x720p@60
1080p (1125p)@60	2200	1125	1920	1080	1920x1080p@60
1080p (1125p)@24	2750	1125	1920	1080	1920x1080p@24

[1-8] VDEC SIGNAL INFO 1

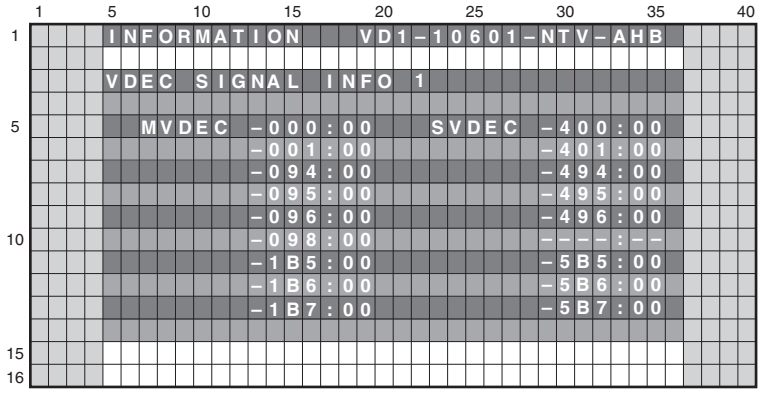

Displays signal status that is input to VDEC.

Device	Sub Address (Main screen)	Sub Address (Sub screen)	Meaning
VDEC	000h	400h	Line system distinction result
	001h	401h	VTR distinction result
	094h	494h	Slot number
	095h	495h	Color system distinction result
	096h	496h	ACC coefficient
	098h	---	3D YC flag
	1B5h	5B5h	MV detection 1
	1B6h	5B6h	MV detection 2
	1B7h	5B7h	MV detection 3

[1-9] VDEC SIGNAL INFO 2

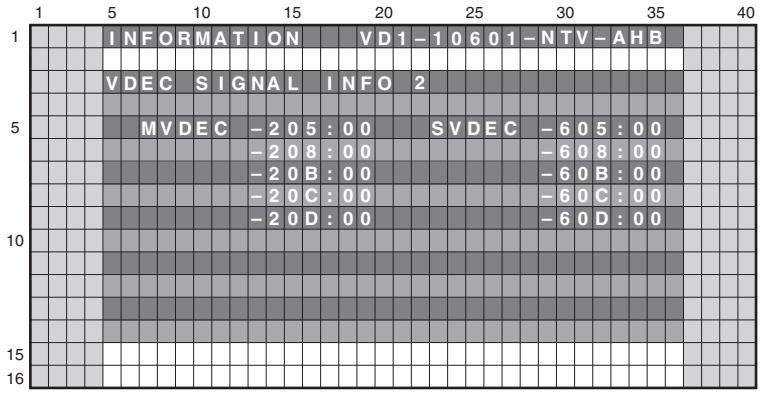

Displays signal status that is input to VDEC.

Device	Sub Address (Main screen)	Sub Address (Sub screen)	Meaning
VDEC	205h	605h	CC detection 1
	208h	608h	CC detection 2
	20Bh	60Bh	CC-CRI detection
	20Ch	60Ch	XDS content advisory 0
	20Dh	60Dh	XDS content advisory 1

[2] PANEL FACTORY (+)

■ Operation Items

This is the menu screen for the adjustment of the panel. Data acquisition and value adjustment can be performed for the following items:

No.	Indication	Description of functions
[2-1]	PANEL INFORMATION	Data, such as the version of the microcomputer of the panel, product serial number, and statuses of EEPROM for adjustment values for the main unit and for backup, are displayed.
[2-2]	PANEL WORKS	Operation data, such as accumulated pulse-meter count, accumulated hour-meter count, accumulated power-on count, and the temperature detected by the sensor, are displayed.
[2-3]	POWER DOWN	The power-down history is displayed.
[2-4]	SHUT DOWN	The shutdown history of the panel section is displayed.
[2-5]	PANEL-1 ADJ (+)	Settings of the driving voltage and AM radio prevention can be performed.
[2-6]	PANEL-2 ADJ (+)	White balance and ABL (power consumption) for the panel can be set.
[2-7]	PANEL FUNCTION (+)	Setting of the panel-degradation correction-level and various functions are displayed.
[2-8]	ETC. (+)	Copying of backup data, clearing of various settings, and changing of settings for functions for which setting data are not stored upon last update are performed.
[2-9]	RASTER MASK SETUP (+)	The mask indication (RASTER) can be set and indicated.
[2-10]	PATTERN MASK SETUP (+)	The mask indication (PATTERN) can be set and indicated.
[2-11]	COMBI MASK SETUP (+)	The mask indication (COMBI) can be set and indicated.

■ Details of indications in each layer

[2-1] PANEL INFORMATION

• Data, such as the version of the microcomputer of the panel, product serial number, and statuses of digital EEPROM for storing the adjustment values and for backup EEPROM, are displayed. No other layers are nested below this layer, and there are no adjustment items.

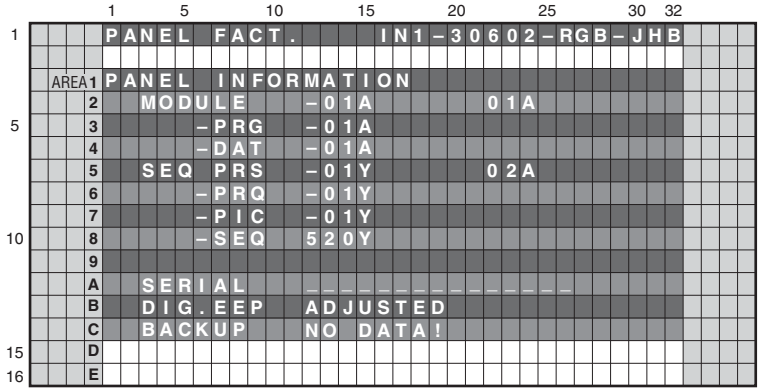

■ Key operation

<DOWN> : Shifting to PANEL WORKS
<UP> : Shifting to COMBI MASK SETUP (+)
<L/R> : Updating displayed information

■ Contents of the Display item

MODULE : The version of data written in the Module microcomputer is indicated.
-PRG : The program version of the Module microcomputer is indicated.
-DAT : The data version of the Module microcomputer is indicated.
SEQ PRS : The version of data written in the Sequence LSI is indicated.
-PRG : The program version of the Sequence LSI is indicated.
-PIC : The Picture-data version of the Sequence LSI is indicated.
-SEQ : The sequence-data version of the Sequence LSI is indicated.
SERIAL : The serial number of the module is indicated.
DIG.EEP : The adjusted status of the EEPROM that is mounted on the DIGITAL Assy is indicated.
BACKUP : The adjusted status of the EEPROM for backup that is mounted on the SENSOR Assy is indicated.

[2-2] PANEL WORKS

• Data on operations, such as the accumulated pulse-meter counts, hour-meter count, power-on count, and temperature detected by the sensor, are displayed. No other layers are nested below this layer, and there are no adjustment items.

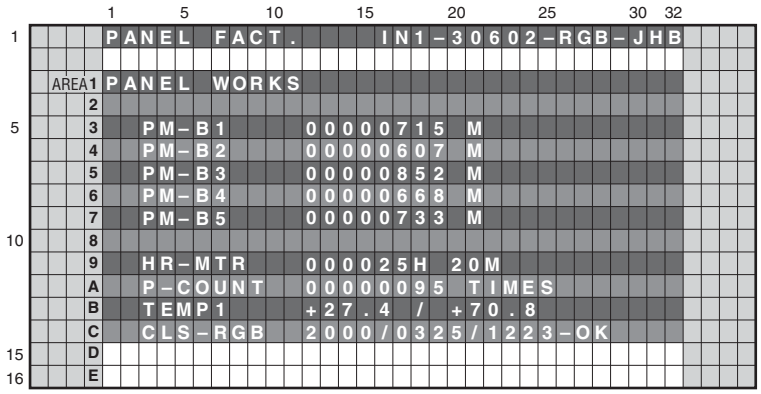

■ Key operation

<DOWN> : Shifting to POWER DOWN
<UP> : Shifting to PANEL INFORMATION
<L/R> : Updating displayed information

← Temperature unit is " °C (Centigrade) ".

■ Contents of the Display item

- PM-B1 to B5: The accumulated pulse-meter counts for the 5 blocks on the screen are indicated. (the lowest-order digit represents millions of pulses.)
- HR-MTR: The hour-meter value (accumulated power-on hours) is indicated.
- P-COUNT: The accumulated power-on count is indicated.
- TEMP1: The current panel temperature and the historical maximum temperature recorded in memory are indicated. The range of temperature indication is from -50.0 to +99.9. (The temperature unit is " °C (Centigrade) ".)
- CLS-RGB: Data obtained from the color sensor are displayed in the order R, G, and B, with the status indication at the end.

CLS Status	OSD Indication
Function OFF	-OFF
Color sensor module non connection	-NC
Data abnormality	-INV
Data normal	-OK

Note:
Turning ON the functions of the color sensor can be performed in the ETC(+) layer.

[2-3] POWER DOWN

- The power-down history is displayed. No other layers are nested below this layer.

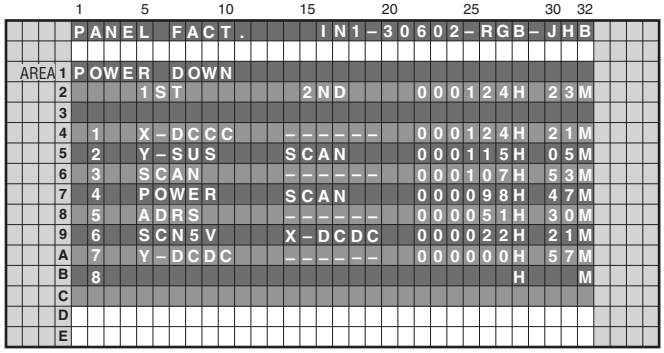

■ Key operation

<DOWN> : Shifting to SHUT DOWN
<UP> : Shifting to PANEL WORKS
<L/R> : Updating displayed information

■ Contents of the Display item

- The last most 8 power-down histories are displayed with the hour-meter values that indicate the hours when power-downs occurred.
- When power-down is confirmed, the factor is displayed as "1st", "2nd", according to the accuracy order.
- The power-down history is not recorded when the power-down occurred at the same place and same time.

<Causes of power-down and corresponding OSD indications>

Cause of power-down	OSD Indication	Cause of power-down	OSD Indication
POWER SUPPLY Unit	P-PWR	ADDRESS Assy	ADRS
SCAN Assy	SCAN	DC/DC converter for X drive	X-DCDC
5 V power for SCAN	SCN5V	X-SUS	X-SUS
DC/DC converter for Y drive	Y-DCDC	DIG-DCDC	D-DCDC
Y-SUS	Y-SUS	Unknown	UNKNOW

[2-4] SHUT DOWN

- The shutdown history of panel section is displayed. No other layers are nested below this layer, and there are no adjustment items.

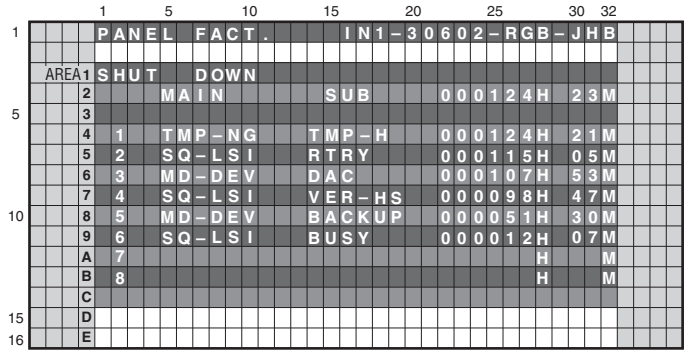

■ Key operation

<DOWN> : Shifting to PANEL-1 ADJ (+)
<UP> : Shifting to POWER DOWN
<L/R> : Updating displayed information

■ Contents of the Display item

- The shutdown history is displayed. The last most 8 shutdown histories are displayed with the hour-meter values that indicate the hours when shutdowns occurred.
- When there is detail information when shutdown occurred, the possible defective part is displayed as Sub information.
- The shutdown history is not recorded when the shutdown occurred at the same place and same time.

<Cause of shutdown and corresponding OSD Indication >

Cause of shutdown (MAIN)		Cause of shutdown (SUB)	
Main cause	**OSD Indication**	**Sub cause**	**OSD Indication**
SQ_LSI	SQ_LSI	Communication Error	RTRY
		Drive Stop	SQNO
		Busy	BUSY
		Version mismatching (H/S)	VER-HS
		Version mismatching (H/M)	VER-HM
		Version mismatching (H/I)	VER-HI
MDU-DEVICE	MD-DEV	Digital EEPROM	EEPROM
		Backup EEPROM	BACKUP
		DAC IC	DAC
Abnormally in RST2 power supply	RST2	–	–
Abnormally in panel temperature	TMP-NG	High temperature of the panel	TMP-H
		Low temperature of the panel	TMP-L

[2-5] PANEL-1 ADJ (+)

This is a page for settings for the driving voltage and AM radio countermeasures. Pressing the ENTER/SET key shifts the screen to the next nested layer below for item selection.
On third line of the screen, the white balance, ABL table, and drive sequence in the current status are displayed.
(Items that have lower layers are the same.)

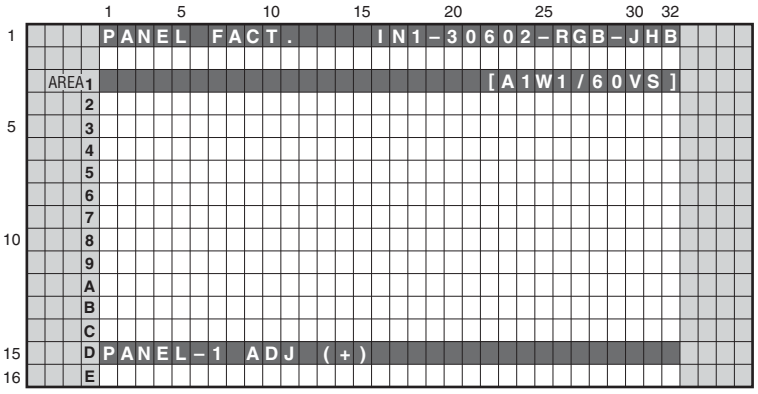

■ Key operation

<DOWN> : Shifting to PANEL-2 ADJ (+)
<UP> : Shifting to POWER DOWN
<SET> : Shifting to the next nested layer

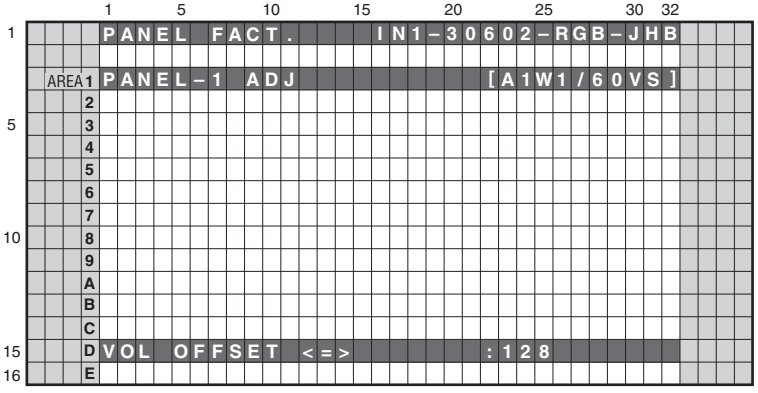

■ Key operation

<DOWN> : Shifting to the next item
<UP> : Shifting to the previous item
<RIGHT> : Adding by one to the adjustment/ setting value
<LEFT> : Subtracting by one from the adjustment/setting value
<VOL+> : Adding by 10 to the adjustment/ setting value
<VOL-> : Subtracting by 10 from the adjustment/setting value
<SET> : Determining the adjustment/setting value and shifting to the upper layer

When entered to this layer, panel white balance and the gamma setting become the default temporarily for setting that is necessary for voltage adjustment. Turn off the noise option function.

<Next nested layer of PANEL-1 ADJ (+)>

No.	Item	OSD Indication	Variable Range	Setting Value	RS-232C Command	Remarks
1	Vsus voltage	VOL SUS <=>	000 to 255	Factory adjustment value	VSU	
2	Vysnofs voltage	VOL OFFSET <=>			VOF	
3	Vyprst voltage	VOL RST P <=>			VRP	
4	Vxpofs1 voltage	VOL XPOFS1 <=>			VX1	
5	Vxpofs2 voltage	VOL XPOFS2 <=>			VX2	
6	Vyknofs1,2 voltage	VOL YKNOFS1 D <=>			V1F	
7	Vyknofs3 voltage	VOL YKNOFS3 D <=>			V3F	
8	Vyknofs4 voltage	VOL YKNOFS4 D<=>			V4F	
9	∆ Vyknofs1,2/3/4	VOL YKNOFSA D<=>			VYF	
10	First reset (wedge width)	RESET1ST_KSB <=>	112 to 144	128	R1K	Factory use item
11	Second reset (wedge width)	RESET2ND_KSB <=>			R2K	
12	1SF - Y sus tail (wedge width)	YSTL_1SF_KSB <=>			Y1K	
13	1SF - Y sus tail (resonance down width)	YSTL_1SF_HZ <=>			Y1Z	
14	3SF and later - first X sus (resonance up width)	XSUS_1ST_B <=>			X1B	
15	2SF - second Y sus (resonance up width)	YSUS_2ND_B <=>			Y2B	
16	2SF - third X sus (resonance up width)	XSUS_3RD_B <=>			X3B	
17	2SF - repeat Y sus (resonance up width)	YSUS_B <=>			YSB	
18	2SF - repeat X sus (resonance up width)	XSUS_B <=>			XSB	
19	3SF and later - Y sus tail (wedge width)	YSTL_KSB <=>			YTK	
20	3SF and later - Y sus tail (resonance down width)	YSTL_HZ <=>			YTZ	
21	2SF - Y sus tail (wedge width)	YSTL_2SF_KSB <=>			Y2K	
22	2SF - Y sus tail (resonance down width)	YSTL_2SF_HZ <=>			Y2Z	
23	3SF and later (2 pulses of SSF) - Y sus tail (wedge width)	YSTL_FMR_KSB <=>			YNK	
24	Timing between Scan and Address	SCAN ADRS ADJ <=>			SAT	
25	SUS frequency (AM radio anti-jamming)	SUS FREQ <=>	MODE1 to 8	MODE1	SFR	Note

Note: It is necessary to turn OFF and ON the power for reflecting the setting change.

[2-6] PANEL-2 ADJ (+)

- White balance of the panel can be adjusted. Pressing the ENTER/SET key shifts the screen to the next nested layer below for item selection.

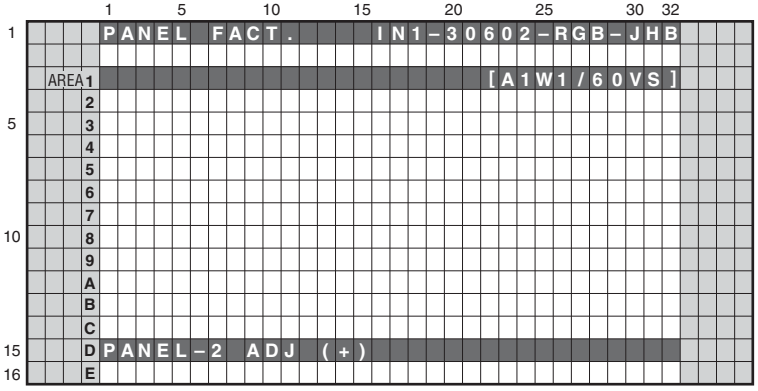

■ Key operation

<DOWN> : Shifting to PANEL FUNCTION (+)
<UP> : Shifting to PANEL-1 ADJ (+)
<SET> : Shifting to the next nested layer

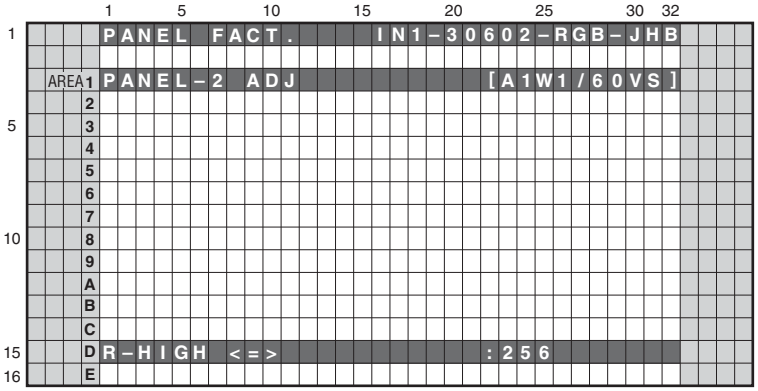

■ Key operation

<DOWN> : Shifting to the next item
<UP> : Shifting to the previous item
<RIGHT> : Adding by one to the adjustment/ setting value
<LEFT> : Subtracting by one from the adjustment/setting value
<VOL+> : Adding by 10 to the adjustment/ setting value
<VOL-> : Subtracting by 10 from the adjustment/setting value
<SET> : Determining the adjustment/setting value and shifting to the upper layer

<Next nested layer of PANEL-2 ADJ (+)>

No.	Item	OSD Indication	Variable Range	Setting Value	RS-232C COMMAND	Remarks
1	Panel WB R highlight	R-HIGH <=>	000 to 999	Factory adjustment value	PRH	
2	Panel WB G highlight	G-HIGH <=>			PGH	
3	Panel WB B highlight	B-HIGH <=>			PBH	
4	Panel WB R lowlight	R-LOW <=>	000 to 999		PRL	
5	Panel WB G lowlight	G-LOW <=>			PGL	
6	Panel WB B lowlight	B-LOW <=>			PBL	
7	ABL	ABL <=>	000 to 255		ABL	

The ABL/WB adjustment values are grouped into three tables with ABL and four tables with WB, depending on the drive sequences. The adjustment value for the actually driven table is displayed. The number of the adjustment table and the drive sequence currently selected are displayed on the right side of the third line as the On-Screen display.

<ABL/WB adjustment table and Drive sequence>

ABL Table	WB Table	OSD Indication	Drive Sequence	OSD Indication	Remarks
TABLE 1	TABLE 1	A1W1	VIDEO-60Hz	60VS	
			PC-60Hz	60PS	
TABLE 2	TABLE 2	A2W2	VIDEO-48Hz	48VS	
			VIDEO-50Hz	50VS	
TABLE 3	TABLE 3	A3W3	VIDEO-72Hz	72VS	
			VIDEO-75Hz-1	75V1	
	TABLE 4	A3W4	VIDEO-75Hz-2	75V2	Correspond to MASK indication only

[2-7] PANEL FUNCTION (+)

- A level setting for panel degradation correction can be made. Pressing the ENTER/SET key shifts the screen to the next nested layer below for item selection.

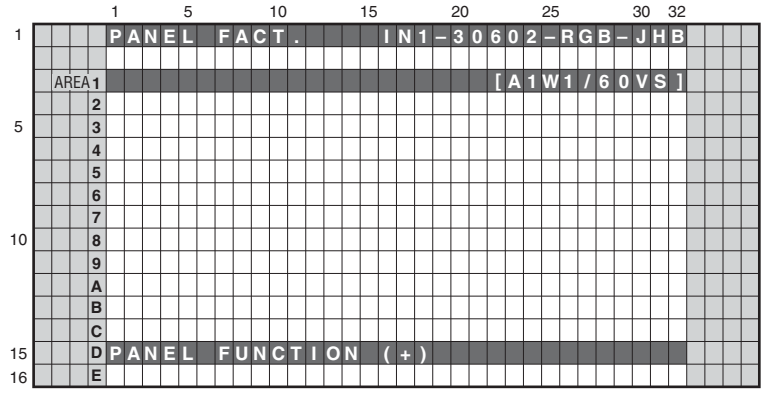

■ Key operation

<DOWN> : Shifting to ETC.(+)
<UP> : Shifting to PANEL-2 ADJ (+)
<SET> : Shifting to the next nested layer

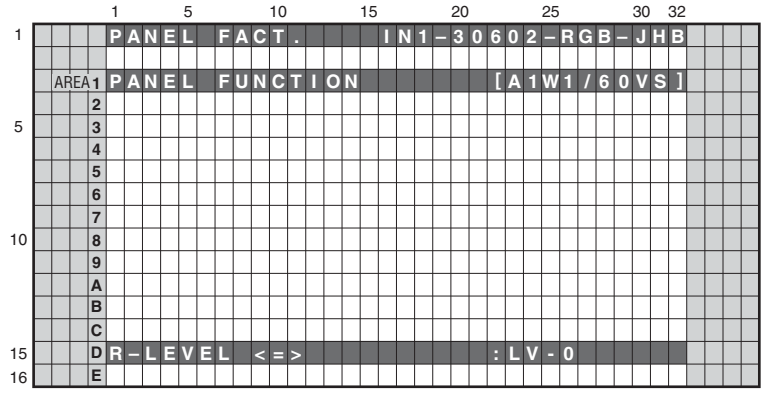

■ Key operation

<DOWN> : Shifting to the next item
<UP> : Shifting to the previous item
<RIGHT> : Adding by one to the adjustment/ setting value
<LEFT> : Subtracting by one from the adjustment/setting value
<SET> : Determining the adjustment/setting value and shifting to the upper layer

<Next nested layer of PANEL FUNCTION (+)>

No.	Item	OSD Indication	Variable Range	Setting Value	RS-232C COMMAND	Remarks
1	R deterioration correction LEVEL	R-LEVEL <=>	Lv-10 to 7	Lv-3	RRL	Factory use item (Note)
2	G deterioration correction LEVEL	G-LEVEL <=>		Lv-2	RGL	
3	B deterioration correction LEVEL	B-LEVEL <=>		Lv-0	RBL	
4	L1 address	ADDRESS L1 <=>	PH0 to 9	PH1	AP0	
5	L2 address	ADDRESS L2 <=>		PH3	AP0	
6	L3 address	ADDRESS L3 <=>		PH1	AP1	
7	L4 address	ADDRESS L4 <=>		PH3	AP1	
8	U1 address	ADDRESS U1 <=>		PH1	AP2	
9	U2 address	ADDRESS U2 <=>		PH3	AP2	
10	U3 address	ADDRESS U3 <=>		PH1	AP3	
11	U4 address	ADDRESS U4 <=>		PH3	AP3	
12	Streaking correction	STK MODE <=>	OFF to MODE1 to 8	MODE1	SKM	
13	Black display mode	FULL BLACK <=>	OFF to MODE1	MODE1	FBM	
14	Panel Rx characteristic	PANEL RX <=>	000 to 999	Factory adjustment value	PRX	Factory use item
15	Panel Ry characteristic	PANEL RY <=>	000 to 999		PRY	
16	Panel Gx characteristic	PANEL GX <=>	000 to 999		PGX	
17	Panel Gy characteristic	PANEL GY <=>	000 to 999		PGY	
18	Panel Bx characteristic	PANEL BX <=>	000 to 999		PBX	
19	Panel By characteristic	PANEL BY <=>	000 to 999		PBY	
20	Color sensor R coefficient	CLS R <=>	000 to 255	128	CSR	
21	Color sensor G coefficient	CLS G <=>	000 to 255	128	CSG	
22	Color sensor B coefficient	CLS B <=>	000 to 255	128	CSB	

Note: It is necessary to turn OFF and ON the power for reflecting the setting change.

[2-8] ETC. (+)

- Clearance of various log data for the panel and changing of settings for which setting data were not stored upon last update can be performed.
  Pressing the ENTER/SET key shifts the screen to the next nested layer below for item selection.

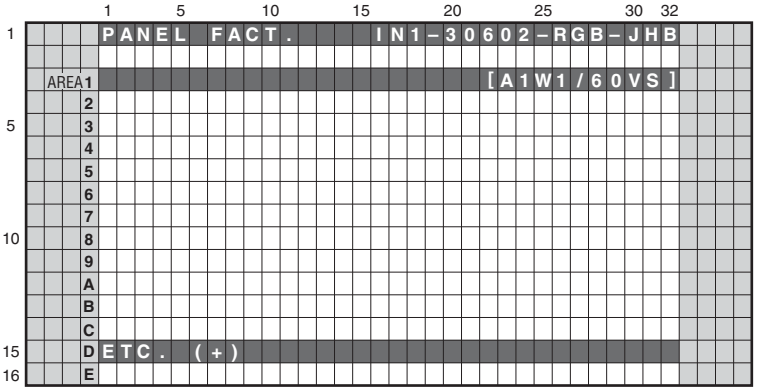

■ Key operation

<DOWN> : Shifting to RASTER MASK SETUP (+)
<UP> : Shifting to PANEL FUNCTION (+)
<SET> : Shifting to the next nested layer

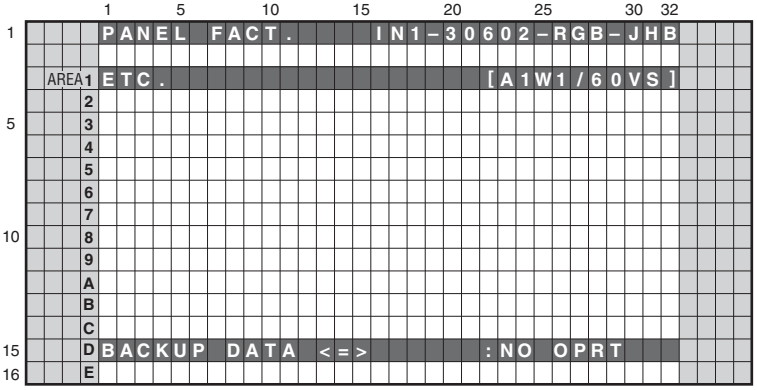

■ Key operation

<DOWN> : Shifting to the next item
<UP> : Shifting to the previous item
<RIGHT> : Adding by one to the adjustment/setting value
<LEFT> : Subtracting by one from the adjustment/setting value
<SET> : Determining the adjustment/setting value and shifting to the upper layer

<Next nested layer of ETC (+)>

No.	Item	OSD Indication	Processing Contents	RS-232C COMMAND	Remarks
1	Backup EEPROM data	BACKUP DATA <=>	• NO OPRT (No operation) • TRANSFER (Backup data transmission)	BCP	
2	Digital EEPROM data	DIGITAL EEPROM <=>	• NO OPRT (No operation) • REPAIR (Adjustment is complete) • DELETE (Adjustment is not complete)	FAJ/UAJ	
3	PD history	PD INFO. <=>	• NO OPRT (No operation) • CLEAR (Data clear)	CPD	
4	SD history	SD INFO. <=>		CSD	
5	HOUR METER	HR-MTR INFO. <=>		CHM	
6	Pulse meter	PM/B1-B5 <=>		CPM	
7	PON counter	P COUNT INFO. <=>		CPC	
8	Maximum temperature	MAX TEMP. <=>		CMT	
9	Mirror reversing display	MIRROR <=>	• Mirror reversing display OFF • MODE1 (Right and left reversing) • MODE2 (Top and bottom reversing) • MODE3 (Right and left, Top and bottom reversing)	MIR	The indication on the menu is also highlighted. The setting is canceled upon power-off.
10	Color sensor mode	CLS <=>	• Color sensor operation OFF • Color sensor operation ON	CSF	

[2-9] RASTER MASK SETUP (+)

• This menu set the RASTER MASK and the drive sequence at RASTER MASK state. Pressing the ENTER/SET key shifts the screen to the next nested layer below for item selection.

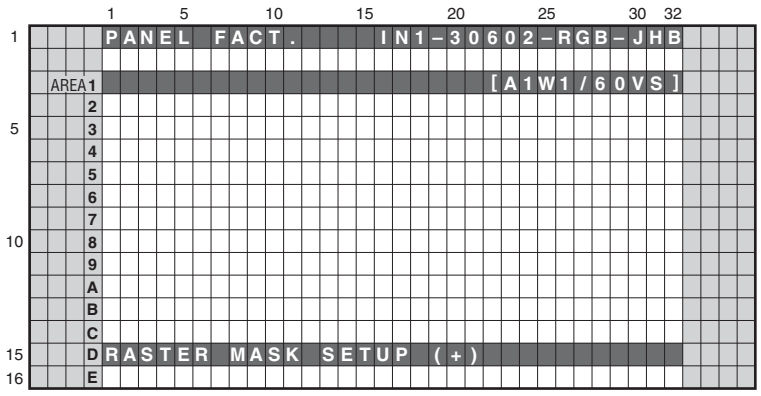

■ Key operation

<DOWN> : Shifting to PATTERN MASK SETUP (+)
<UP> : Shifting to ETC. (+)
<SET> : Shifting to the next nested layer

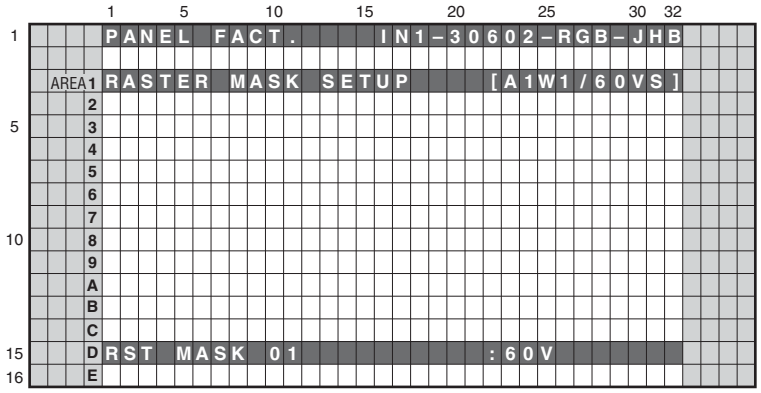

■ Key operation

<DOWN> : Shifting to the next MASK
<UP> : Shifting to the previous MASK
<RIGHT> : Changing MASK sequence (+)
<LEFT> : Changing MASK sequence (-)
<SET> : Determining the adjustment/setting value and shifting to the upper layer

• The changed sequence and the ABL/WB table are retained until the mask is turned off.

<Next nested layer of RASTER MASK SETUP (+)>

No.	Item	OSD Indication	MASK Display Sequence	RS-232C COMMAND	Remarks
1	Mask off	MASK OFF		MKR/VFQ	
2	Display raster mask 01	RST MASK 01 <=>	<=>50V<=>60V<=>60P<=> 72V<=>75V1<=>75V2<=>		
...		...			
26	Display raster mask 25	RST MASK 25 <=>			

[2-10] PATTERN MASK SETUP (+)

• This menu set the PATTERN MASK and the drive sequence at PATTERN MASK state. Pressing the ENTER/SET key shifts the screen to the next nested layer below for item selection.

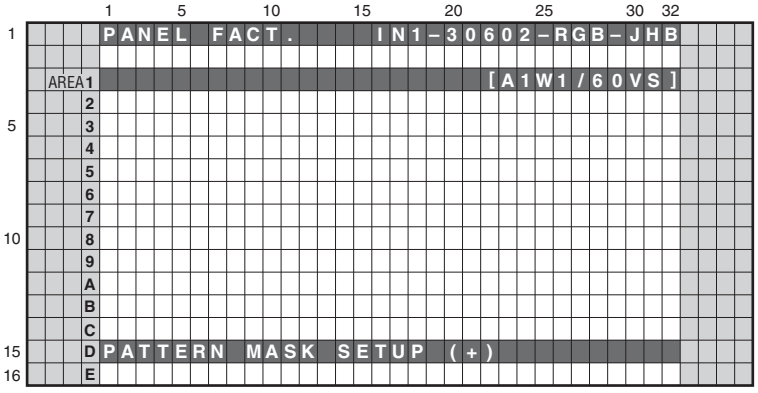

■ Key operation

<DOWN> : Shifting to COMBI MASK SETUP (+)
<UP> : Shifting to RASTER MASK SETUP (+)
<SET> : Shifting to the next nested layer

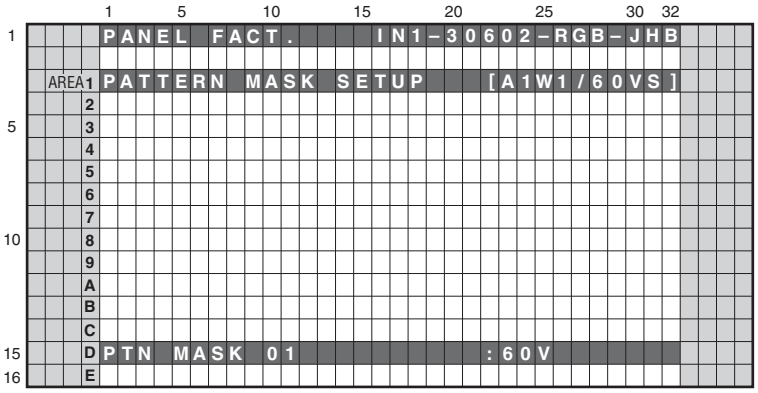

■ Key operation

<DOWN> : Shifting to the next MASK
<UP> : Shifting to the previous MASK
<RIGHT> : Changing MASK sequence (+)
<LEFT> : Changing MASK sequence (-)
<SET> : Determining the adjustment/setting value and shifting to the upper layer

• The changed sequence and the ABL/WB table are retained until the mask is turned off.

<Next nested layer of PATTERN MASK SETUP (+)>

No.	Item	OSD Indication	MASK Display Sequence	RS-232C COMMAND	Remarks
1	Mask off	MASK OFF		MKS/VFQ	
2	Display raster mask 01	PTN MASK 01 <=>	<=>50V<=>60V<=>60P<=> 72V<=>75V1<=>75V2<=>		
...		...			
50	Display raster mask 49	PTN MASK 49 <=>			

[2-11] COMBI MASK SETUP (+)

• This menu set the COMBI MASK and the drive sequence at COMBI MASK state. Pressing the ENTER/SET key shifts the screen to the next nested layer below for item selection.

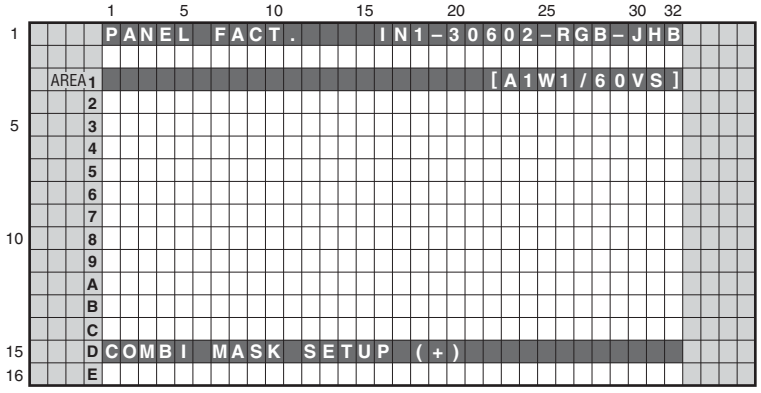

■ Key operation

<DOWN> : Shifting to PANEL INFORMATION
<UP> : Shifting to PATTERN MASK SETUP (+)
<SET> : Shifting to the next nested layer

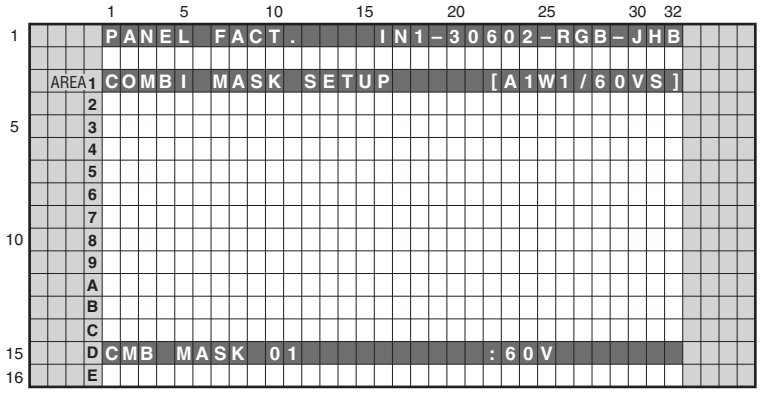

■ Key operation

<DOWN> : Shifting to the next MASK
<UP> : Shifting to the previous MASK
<RIGHT> : Changing MASK sequence (+)
<LEFT> : Changing MASK sequence (-)
<SET> : Determining the adjustment/setting value and shifting to the upper layer

• The changed sequence and the ABL/WB table are retained until the mask is turned off.

<Next nested layer of COMBI MASK SETUP (+)>

No.	Item	OSD Indication	MASK Display Sequence	RS-232C COMMAND	Remarks
1	Mask off	MASK OFF		MKC/VFQ	
2	Display raster mask 01	CMB MASK 01 <=>	<=>50V<=>60V<=>60P<=> 72V<=>75V1<=>75V2<=>		
...		...			
18	Display raster mask 17	CMB MASK 17 <=>			

[3] OPTION

Operation item

No.	Function	Content	RS-232C
[3-1]	CH PRESET <=>	Set the channel map for production line	SCP
[3-2]	ANTENNA MODE <=>	Switch the CABLE/AIR of the analog tuner	INJ
[3-3]	AFT <=>	Set AFT of the analog broadcasting	AFT
[3-4]	SYNC DET (+)	Set the synchronized signal detection of VDEC	–––
[3-5]	CTI (+)	Set the synchronized signal detection of VDEC	–––
[3-6]	CC (+)	Set the ClosedCaption signal detection of VDEC	–––

[3-1] CH PRESET <=>

Exclusively used for production line.

[3-2] ANTENNA MODE <=>

Exclusively used for production line.

[3-3] AFT <=>

Exclusively used for production line.

[3-4] SYNC DET (+)

Exclusively used for technical analysis (details omitted).

[3-5] CTI (+)

Exclusively used for technical analysis (details omitted).

[3-6] CC (+)

Exclusively used for technical analysis (details omitted).

[4] INITIALIZE

Operation item

No.	Function	Content	RS-232C
[4-1]	SIDE MASK LEVEL (+)	Configure the color of the side mask.	SML
[4-2]	FINAL SETUP (+)	Initialize flash memorys on virgin product status	FST
[4-3]	DTB SERVICE MODE (+)	Enter the Digital Tuner Service Menu	–––
[4-4]	Wide XGA AUTO <=>	Exclusively used for technical analsyis.	–––
[4-5]	AUTO ADJUSTMENT (+)	Perform the auto-adjustment setting process	–––

[4-1] SIDE MASK LEVEL (+)

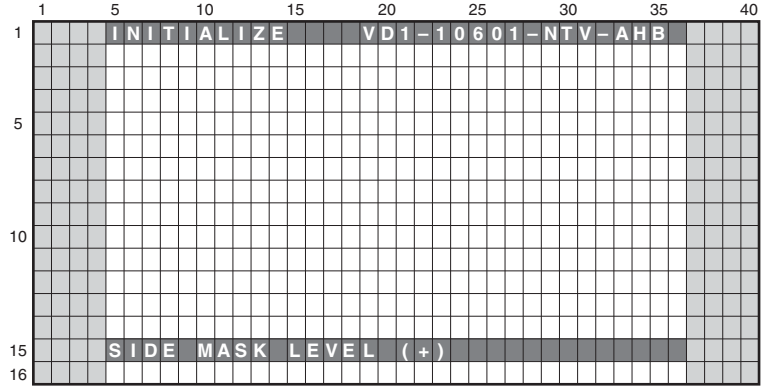

To configure sidemask level (To adjust the values, input signal is required).

Display Item	Content	RS-232C
SIDE MASK LEVEL <=>	Adjust Side Mask level (Adjustable range: 000 to 255, Initial value: 115)	SML

Note: In this mode (SIDE MASK LEVEL), adjustment value cannot changed with the VOLUME +/- keys.

[4-2] FINAL SETUP (+)

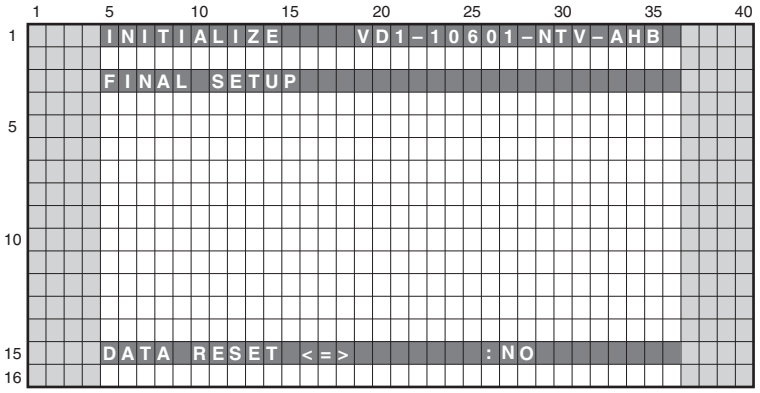

- To reset each memory values to factory default values. Factory command is "FST".
- When the configuration is set to <NO> and the [ENTER/SET] key is pressed, no action is taken and the menu returns to previous screen.
- When the configuration is set to <YES> and the [ENTER/SET] key is pressed for 5 seconds, the reset action executes.

Be sure to disconnect and connect the AC cable after FINAL SETUP.
When replacing the MAIN Assy, the FINAL SETUP is required.

When the unit is turned on for the first time after Final Setup, the “Home”/“Retail” Mode Select screen is displayed. Move the cursor to “Retail”, using the [⬆] or [⬇] key, then press the ENTER/SET key.

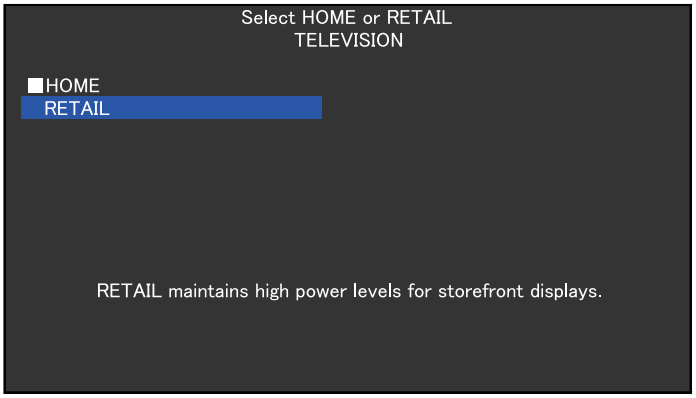

When “Retail” mode is selected, a confirmation screen shown below is displayed. Move the cursor to <Yes>, using the [➡] or [⬅] key, then press the ENTER/SET key.

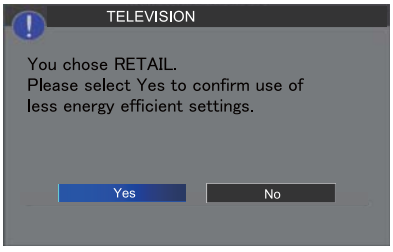

[4-3] DTB SERVICE MENU (+)

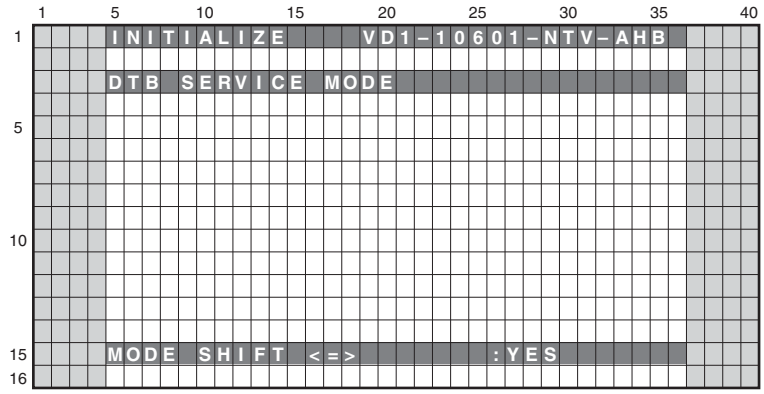

If the [ENTER/SET] key is kept on pressing for 5 second when the status of this menu is <YES>, shift to the DTB SERVICE mode screen. (Release from the SERVICE FACTORY mode.)

[4-4] WIDE XGA AUTO <=>

Exclusively used for technical analysis (details omitted).

[4-5] AUTO ADJUSTMENT (+)

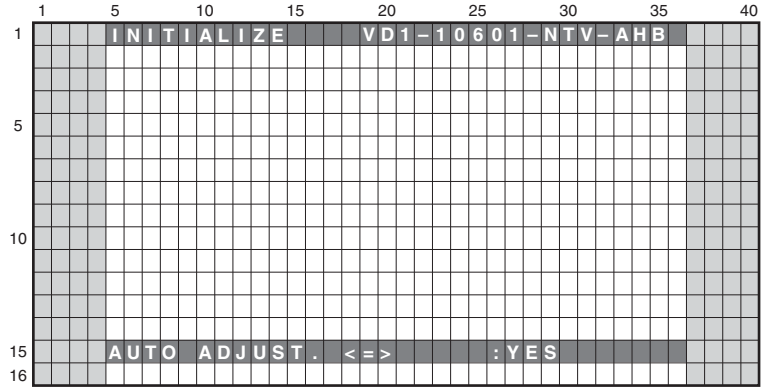

- When the configuration is set to <NO> and the [ENTER/SET] key is pressed, no action is taken and the menu returns to previous screen.
- When the configuration is set to <YES> and the [ENTER/SET] key is pressed for 5 seconds, the auto-adjustment action executes.

- **Be sure to power off with the remote control unit or disconnect and connect the AC cable after the auto-adjustment is completed.**
- **When replacing the IO Assy or MAIN Assy, the auto-adjustment is required.**

6.3 DIGITAL TUNER SERVICE MENU

The Digital Tuner Service Menu is provided for collecting data for technological examination when the Digital Tuner has any problem in the market. This menu is introduced here just for reference.

[1] REMOTE CONTROL CODE IN DIGITAL TUNER SERVICE MENU

The following remote control cord is valid in the Digital Tuner Service Menu.

Remote Control Keys	Basic Functions	Remarks
⬇ (DOWN)	Selecting the menu items and shifting the pages.	Shifting downward to the next item. Moving to the next lower page.
⬆ (UP)		Shifting upward to the next item. Moving to the next upper page.
⬅ (LEFT)	Selecting the setting value.	Modifying the setting of selected items.
➡ (RIGHT)		
ENTER/SET	Shifting the menu layers	Shifting to the next menu screen.
RETURN		Shifting to the previous menu screen.
Numeric Keys	Numeric input	Input the numerical value.
POWER OFF	Power OFF	Turning the power off.
STANDBY/ON		
FACTORY	Factory ON/OFF	Release the Menu, then enter the Service Factory menu.
EXIT	MENU exit	After you exit the menu, the channel that was selected on the menu will be displayed.
MUTING	Muting	
HOME MENU	HOME MENU ON/OFF	

[2] HIERARCHICAL TABLE OF DIGITAL TUNER SERVICE MENU

Item			Remarks
	Large Item		
		Middle Item	
6.3 [3] Digital Tuner Service Menu			
	6.3 [4] HMG Service Menu		
			Exclusively used for technical analysis: HomeMediaGallery-related information indication
	6.3 [5] Digital		
		Modulation	Exclusively used for technical analysis
		Frequency	Exclusively used for technical analysis
		Program Number	Exclusively used for technical analysis
		Audio PID	Exclusively used for technical analysis
		DTV Tuning Status	Exclusively used for technical analysis: Terrestrial digital broadcasting-related information indication
	6.3 [6] Software Version		
			Exclusively used for technical analysis: The software revision information that consists of it in DTB software

[3] DIGITAL TUNER SERVICE MENU SCREEN

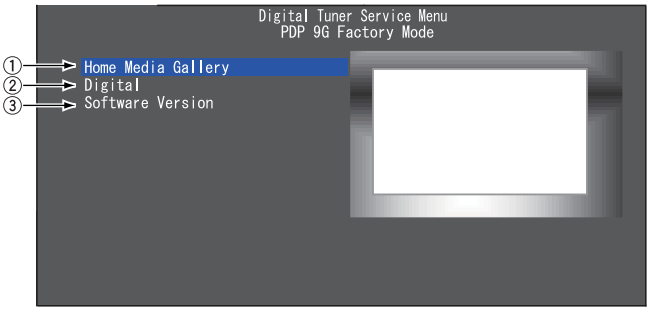

Fig.1 Digital Tuner Service Menu screen

Display a large item list of Digital Tuner Service Menu.
Select each item, and shift to each setting / information display screen.

① HomeMediaGallary-related information indication
(Derivative Model is not indicated.)
② Terrestrial digital-related setting / information indication
③ Digital Tuner-related detailed software version indication

[4] HOME MEDIA GALLERY SCREEN

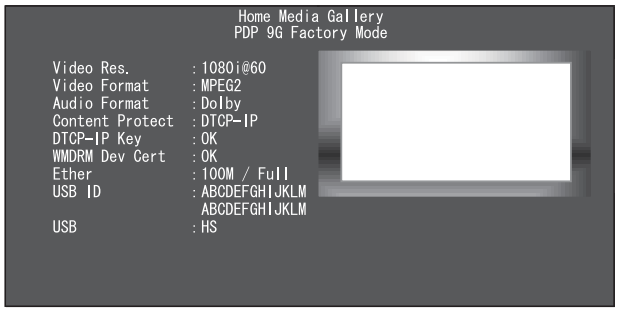

Fig.2 Home Media Gallery screen

Display the HomeMediaGallary-related information.

[5] DIGITAL SCREEN

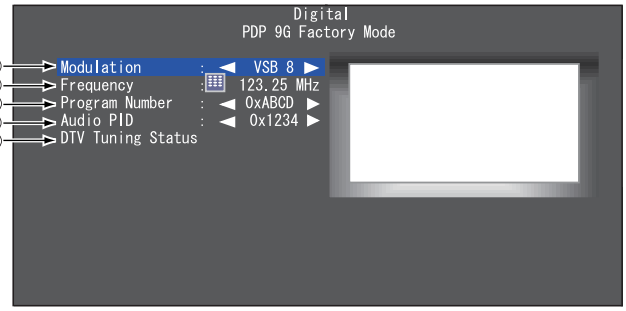

Fig.3 Digital screen (North America)

Display the Digital broadcasting-related setting / information indication.

① The modulation method for receiving a digital broadcast can be selected.
(QAM256/QAM64/VSB8)
② The frequency can be set (up to 2 digits after the decimal point).
③ Program Number in the same stream: Service ID can be selected.
④ Audio PID in the same stream: Audio PID can be selected.
⑤ The tuning status of a digital broadcast is displayed on a separate screen.

The data displayed on the DTV Tuning Status screen are as shown below:
The instructions for servicing using this screen is shown in "Details on how to confirm the factory DTV tuning status" of section 5.2 [6].
Therefore, this screen is introduced here just for reference.

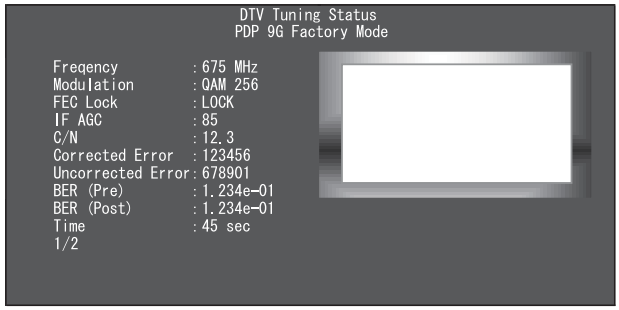

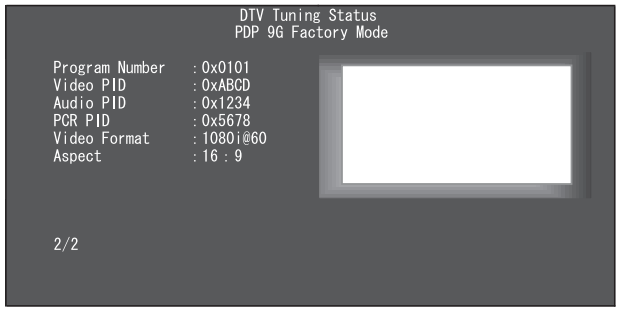

Fig.4 DTV Tunig Status screen

[6] SOFTWARE VERSION SCREEN

The details are not described here, as this is provided for technical examination.

7. DISASSEMBLY
7.1 FLOWCHART OF REMOVAL ORDER

Note: Even if the unit shown in the photos and illustrations in this manual may differ from your product, the procedures described here are common.

Flowchart of removal order for the main parts and boards

It is efficient to proceed with removal of the main parts and boards in the order shown in the chart below:

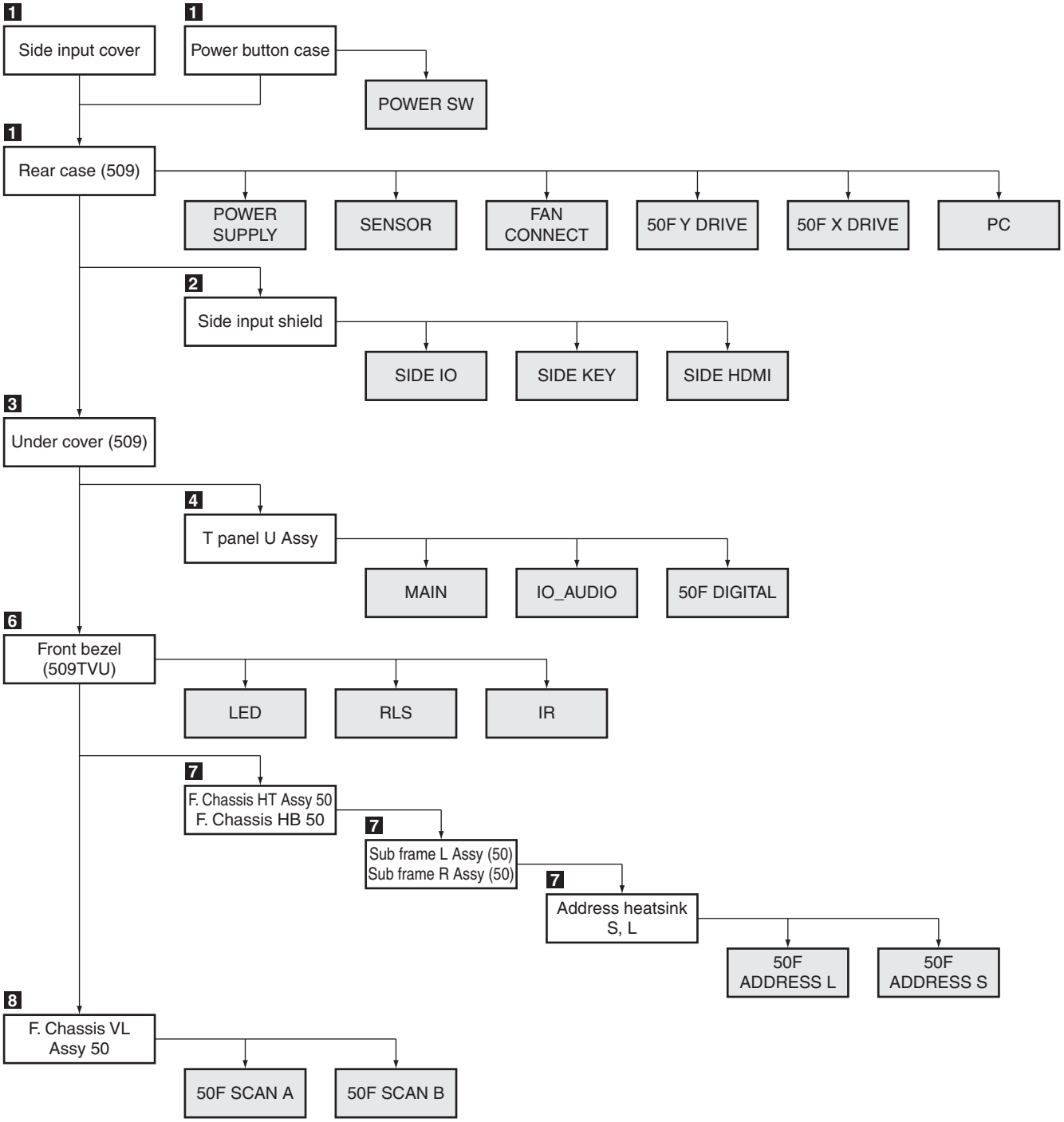

7.2 DISASSEMBLY

Disassembly

Speaker System

① Disconnect the speaker cables.
② Remove the three screws. (in case of hung on wall unit use)
③ Remove the three screws. (in case of table top stand use)
④ Remove the speaker system.
⑤ Remove the three brackets by removing the six screws.

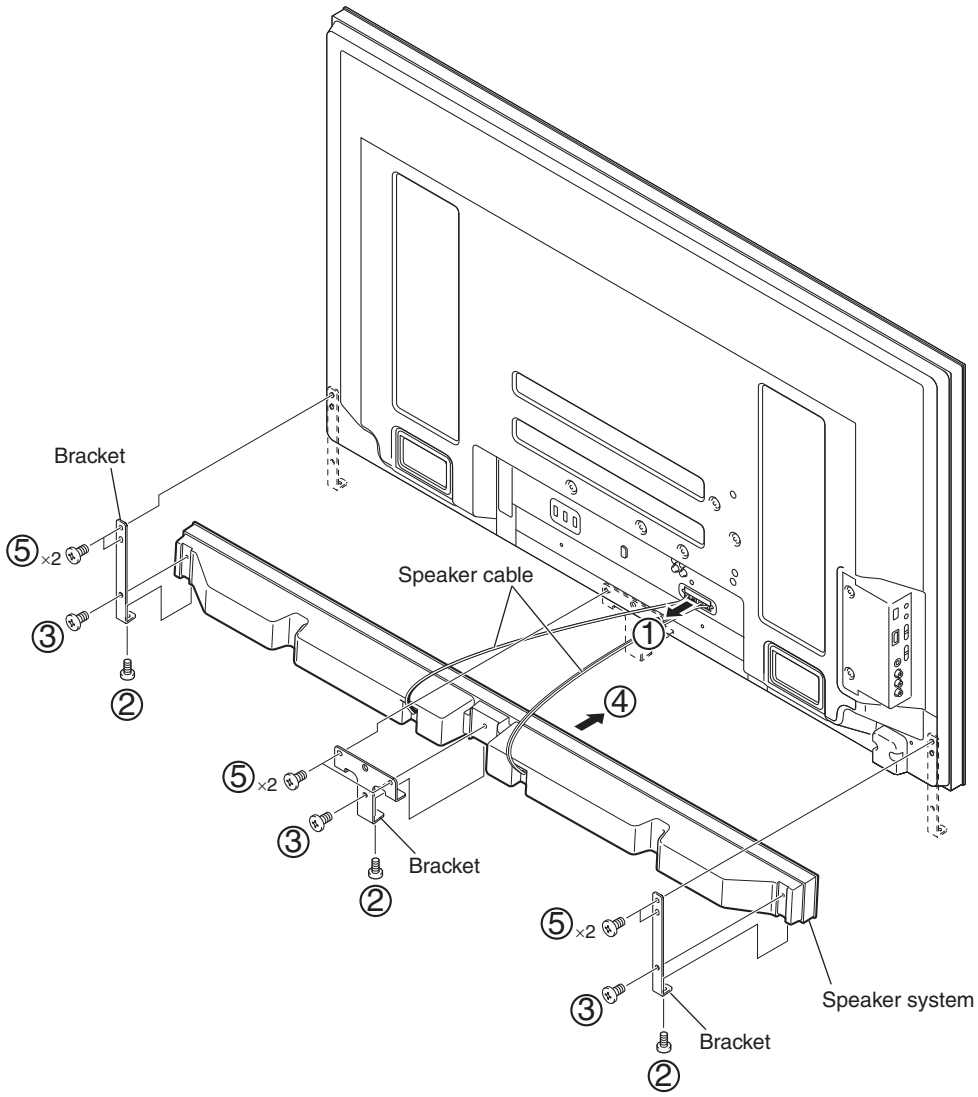

Disassembly

1 Rear Case (509)

● Power button case

① Remove the two screws. (ABA1379)

② Remove the power button case.

● Side input cover

③ Remove the two screws. (ABA1378)

④ Remove the two screws. (ABA1377)

⑤ Remove the side input cover.

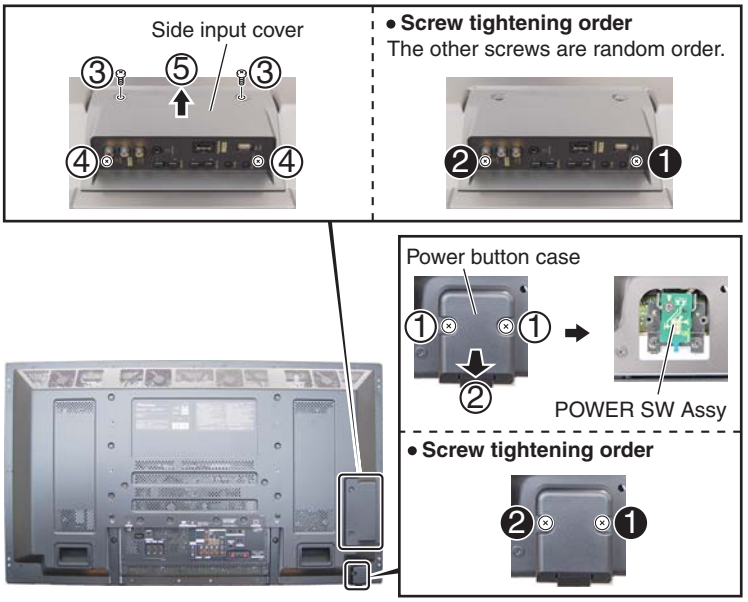

Reference

ABA1377 ABA1378

● Rear case (509)

⑥ Remove the two screws. (ABA1380)

⑦ Remove the two screws. (ABA1379)

⑧ Remove the 25 screws. (ABA1377)

⑨ Remove the rear case (509).

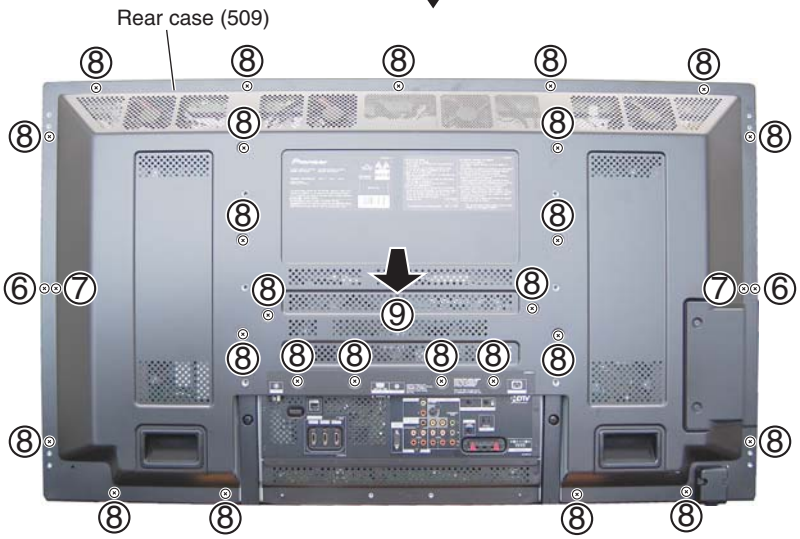

■ Screw tightening order

The other screws are random order.

2 Side Input Shield

① Remove the two screws. (BMZ30P080FTB)
② Remove the two screws. (BPZ30P080FTB)
③ Remove the four screws. (AMZ30P060FTB)
④ Remove the side input shield.

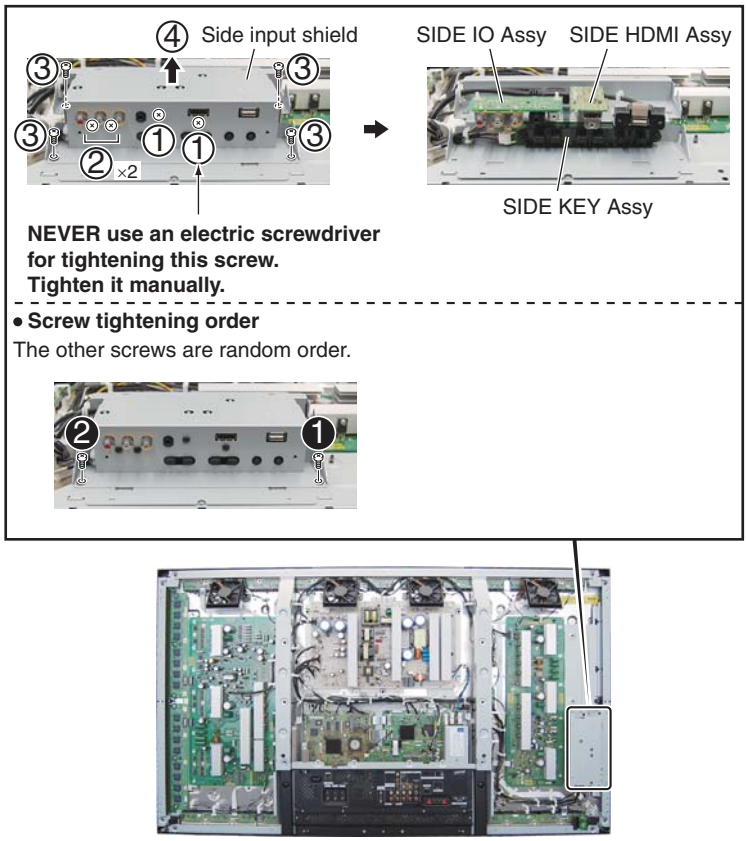

3 Under Cover (509)

① Remove the 10 screws. (ABA1377)
② Remove the under cover (509).

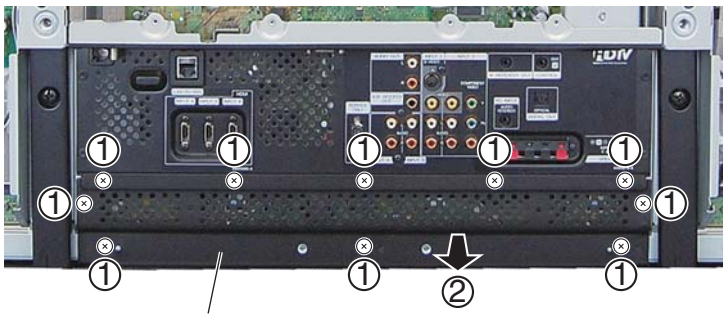

■ Screw tightening order

The other screws are random order.

4 T Panel U Assy

① Remove the 10 screws. (ABA1377)
② Remove the six screws. (BPZ30P080FTB)
③ Remove the two hexagon head screws. (ABA1382)
④ Remove the six screws. (BMZ30P060FTB)
⑤ Disconnect the one flexible cable.
⑥ Disconnect the three connectors.
⑦ Remove the T panel U Assy.

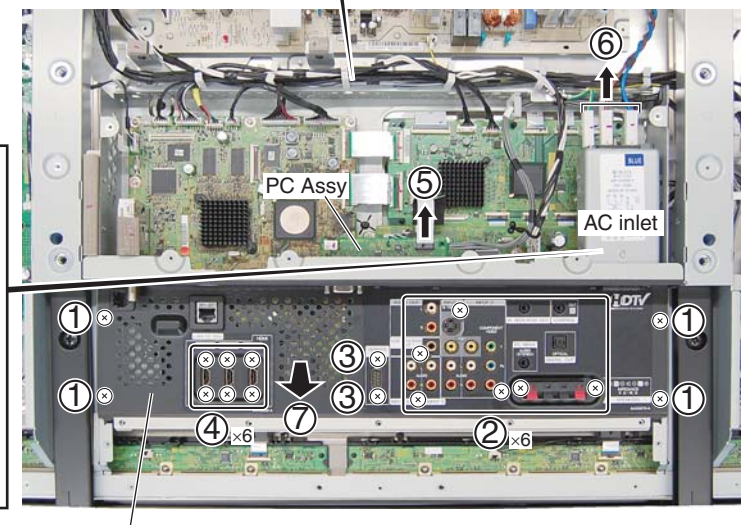

Do NOT pass the AC inlet jumper wire through this wire saddle.

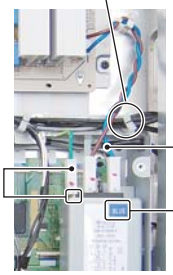

Note: The wiring shown in the photo is different from the actual wiring, because the product in the photo is a prototype. Upon servicing, be sure to restore the original wiring of the unit after repair work.

How to remove the bridge connector

(1) Grip the two short edges of the connector with longnose pliers.
(2) Insert a finger between the longnose pliers and the board to protect the board and the mounted parts on the board from accidental damage by the pliers then, using your finger as a fulcrum and the pliers as a lever, pry the connector upward to remove it.

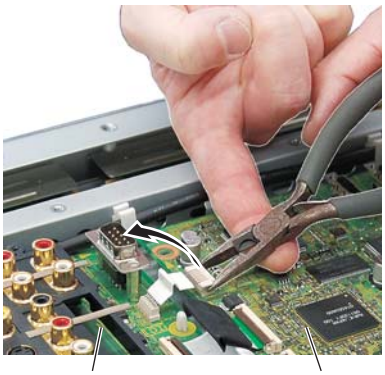

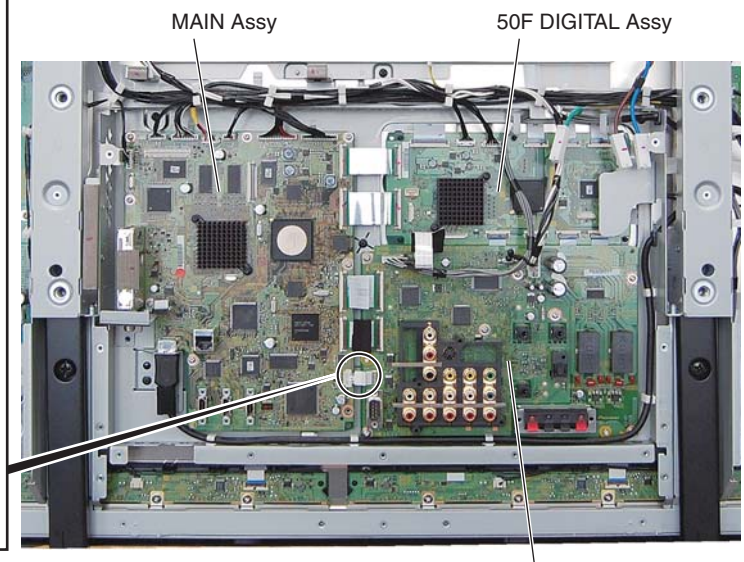

Notes on Lead Dressing

Note: The wiring shown in the photo is different from the actual wiring, because the product in the photo is a prototype. Upon servicing, be sure to restore the original wiring of the unit after repair work.

The J101 and J102 cables require correct orientation for connection. Connect the connectors with white tape to the POWER SUPPLY Unit.

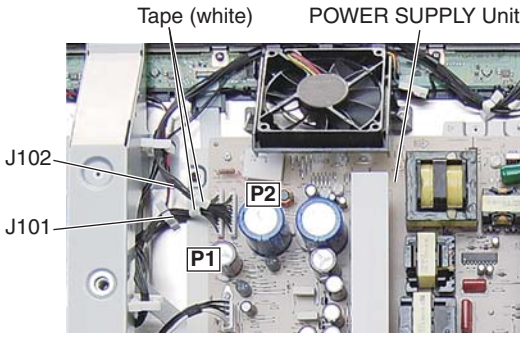

When removing the POWER SUPPLY Unit, be sure to remove not only the POWER SUPPLY Unit but entire PCB base.

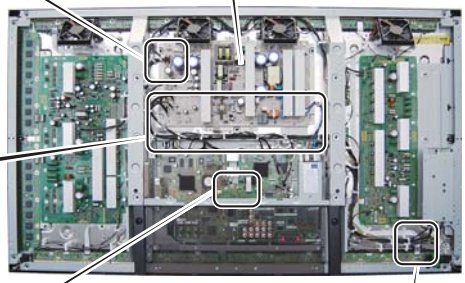

Around the periphery of the Multibase, the J111 cable wires (black and white) must be bound lastly then be dressed so that they pass over other cables.

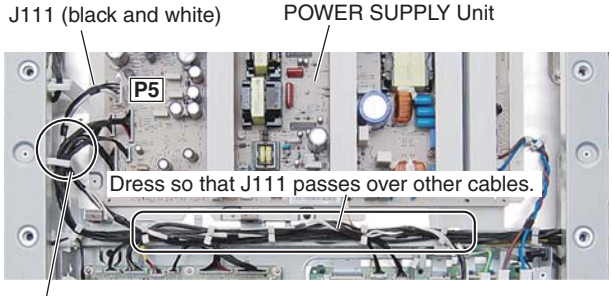

Dress the J118 cable so that it passes over other cables.

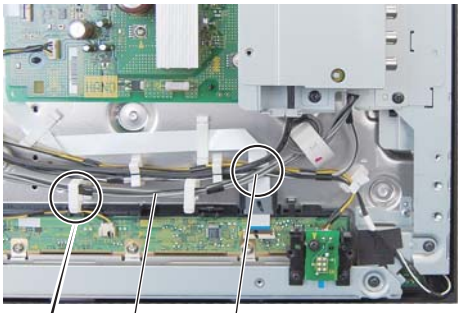

The J215 cable must be passed over the J118 cable.

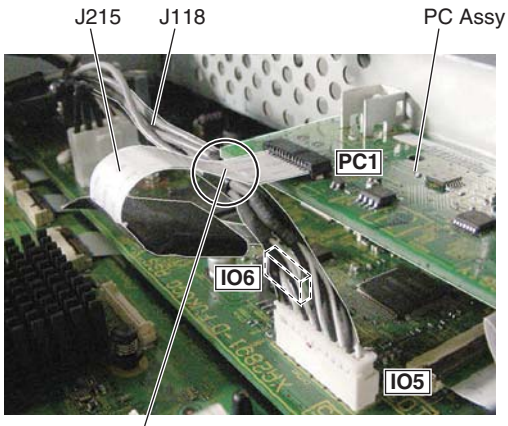

How to remove the newly adopted wire saddle from the chassis

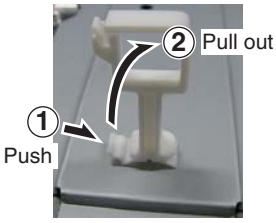

5 Access to 50F DIGITAL Assy

Note: The wiring shown in the photo is different from the actual wiring, because the product in the photo is a prototype. Upon servicing, be sure to restore the original wiring of the unit after repair work.

Note:
When you remove whole Multibase Section, it is not necessary to remove T panel U Assy.

① Remove the six screws. (ABA1377)

② Remove the four screws. (ABA1313)

③ Disconnect the two flexible cables.

Note on connection of the flexible cable
This flexible cables requires correct orientation for connection. Connect the folded side of the cable to the connector on the DIGITAL Assy, as shown in the photo below. **Reversely connecting the cable will damage the Assy.**

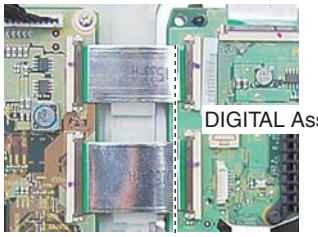

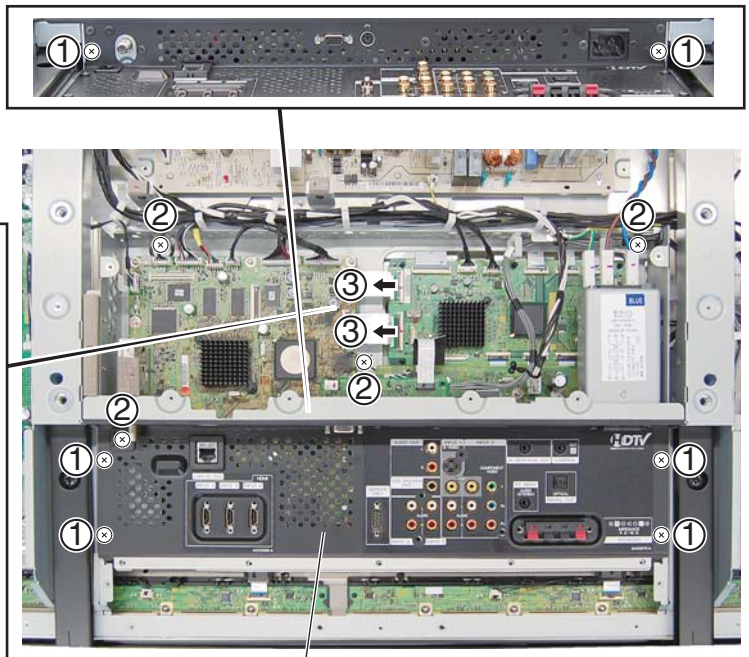

④ Lift the Multibase Section to the direction of the arrow.

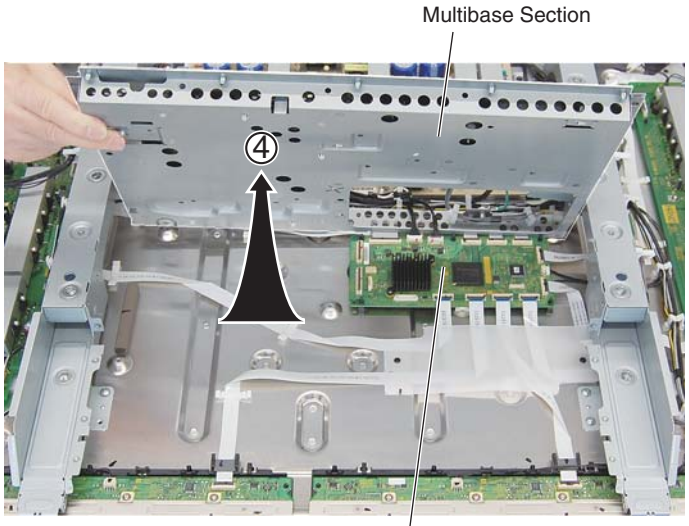

6 Front Bezel (509TVU)

① Remove the four rivets.

② Pull the lower part of the front bezel (509TVU) toward you and out.

③ Remove the front bezel (509TVU), by pulling it upward.

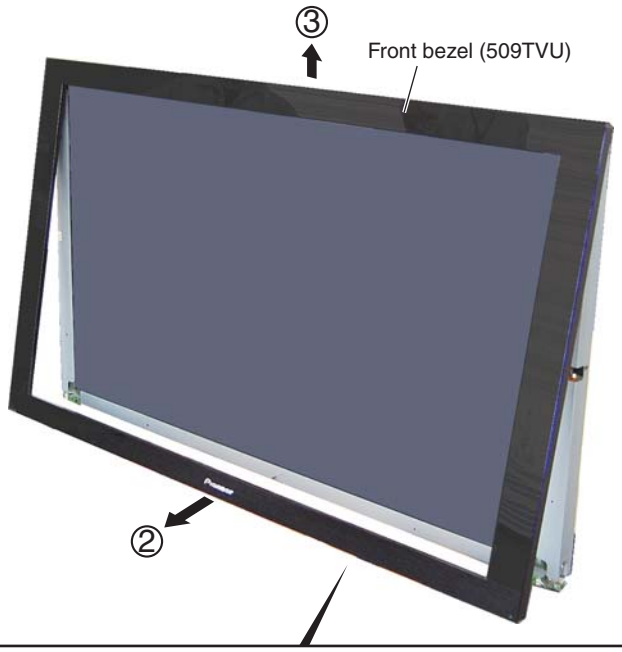

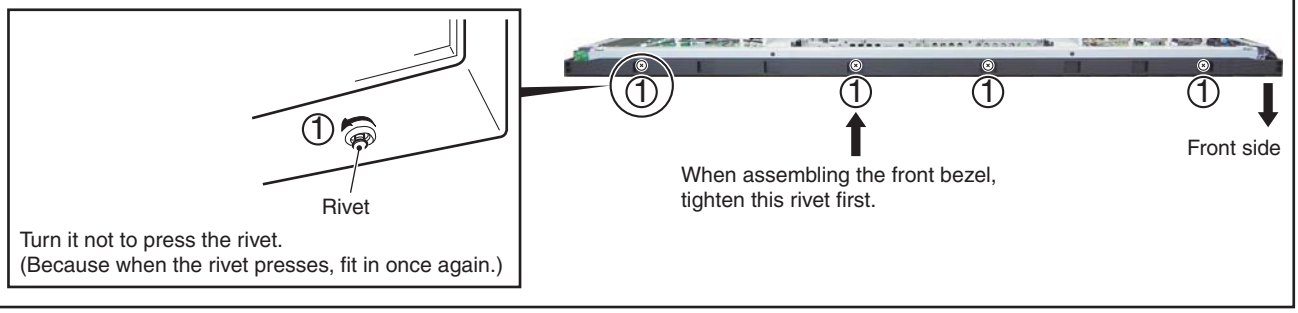

LED Assy

RLS Assy IR Assy

7 Access to ADDRESS L and S Assys

● **F. Chassis HT Assy 50**

① Remove the two screws. (AMZ30P060FTB)
② Remove the two screws. (ABZ30P080FTC)
③ Remove the two screws. (AMZ30P060FTB)
④ Remove the F. chassis HT Assy 50.

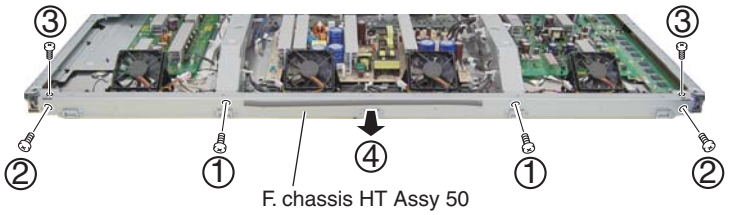

■ **Screw tightening order**

The other screws are random order.

● **F. Chassis HB 50**

① Disconnect cables, connectors, as required.
② Remove the two screws. (AMZ30P060FTB)
③ Remove the two screws. (ABZ30P080FTC)
④ Remove the two screws. (AMZ30P060FTB)
⑤ Remove the F. chassis HB 50.

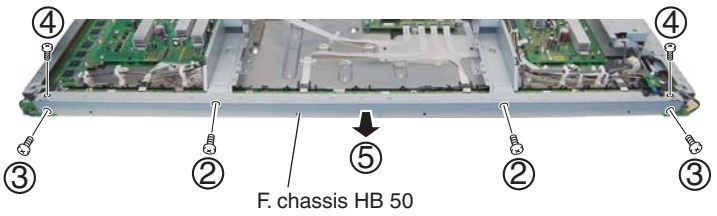

■ **Screw tightening order**

The other screws are random order.

● **Sub frame L and R Assys**

① Disconnect cables, connectors, as required.

② Remove the four screws. (TBZ40P060FTC)

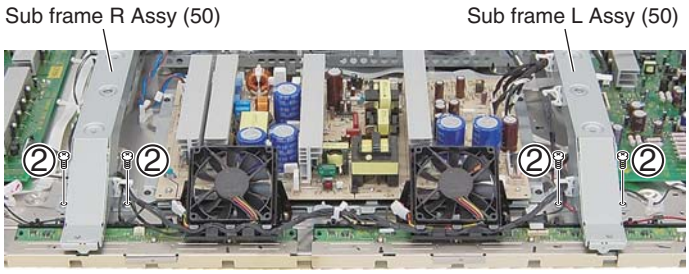

③ Remove the eight screws. (TBZ40P060FTC)

④ Remove the sub frame L and Assys.

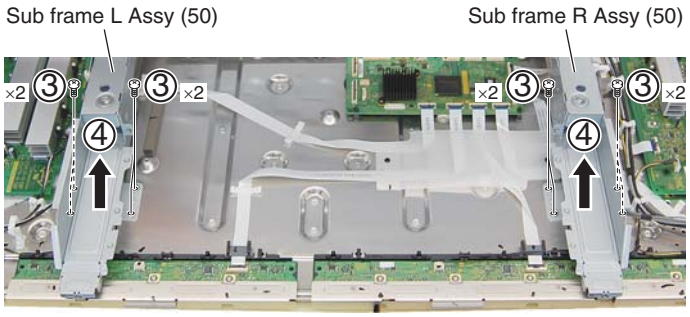

■ **Screw tightening order**

The other screws are random order.

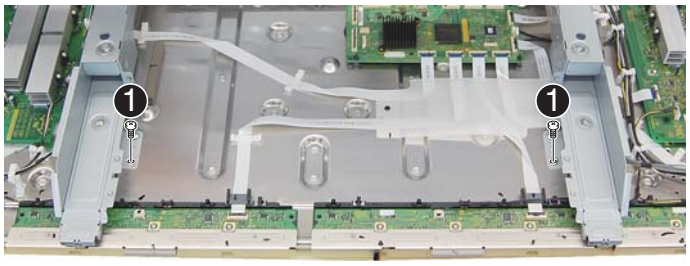

● **Address heatsink S , L**

① Remove the 22 screws. (ABA1351)

② Remove the two address heatsinks S and six address heatsinks L.

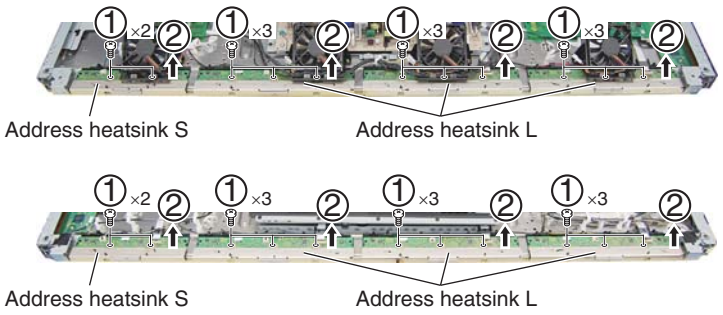

PDP-5020FD

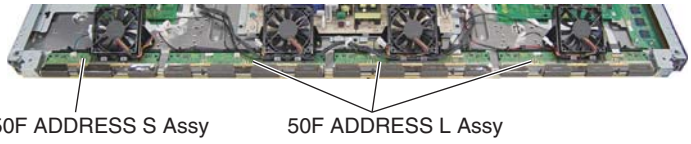

8 Access to SCAN A and B Assys

① Remove the one screw. (APZ30P080FTB)
② Remove the two screws. (ABZ30P080FTC)
③ Remove the two screws. (AMZ30P060FTB)
④ Remove the F. chassis VL Assy 50.

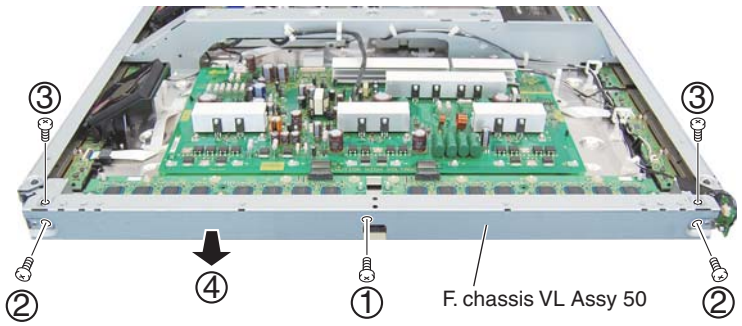

■ Screw tightening order

The other screws are random order.

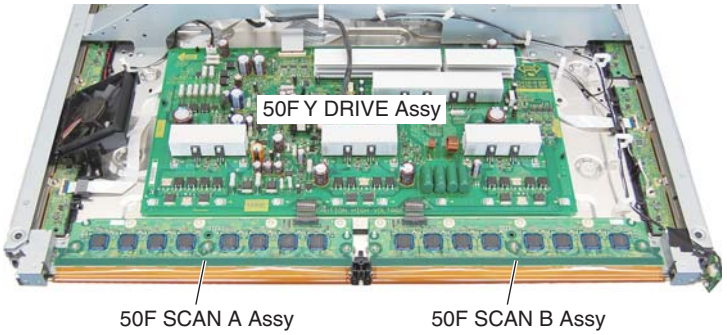

7.3 PRECAUTIONS FOR SPEAKER SYSTEM

SERVICE PRECAUTIONS

Be careful in handling this product, because scratches on cabinet coating are easily noticeable.
When working on this unit, be sure to place the cabinet on a piece of soft cloth for protection.

(1) Grille Assy

The Grille Assy is secured to the baffle plate with two-sided tape and bosses. When removing the Grille Assy, it is necessary to wear cotton gloves.

● Disassembly

1. Insert the tip of your gloved finger into the gap between the Grille Assy in front and the corner of the baffle plate so that the Grille Assy is slightly lifted.

2. Insert the gloved finger to the extent of the second joint into the gap between the cabinet and the Grille Assy.

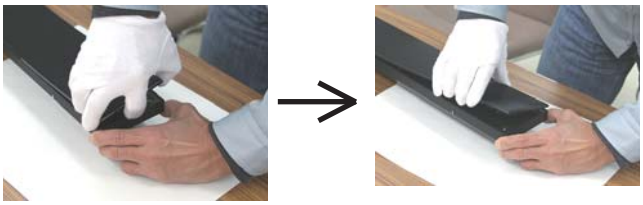

3. Alternately and gradually lift the left and right sides of the Grille Assy by about 5 cm, sliding gloved fingers along the cabinet. When lifting the Grille Assy, be sure to lift the left and right sides alternately, but not both sides simultaneously.

Note: Be careful not to bend the Grille Assy too far. Otherwise, it may be damaged.
OK: Good example **NG:** Bad example

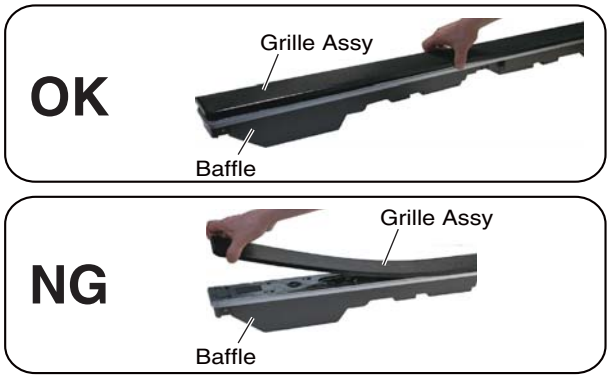

● Reassembly

Remove the old two-sided tape attached to the rear side of the Grille Assy and the front side of the baffle, and adhere new two-sided tape. Press the bosses into the baffle plate and press the entire grill into position.

(2) Woofer (Disassembly)

The woofer is secured to the baffle plate with four screws from the inside. To remove the woofer, first remove the baffle plate.

● Reassembly

When reassembling the woofer, place it so that its ⊕ terminal is suitable for the inside. Tighten the screws to the baffle.

(3) Tweeter (Disassembly)

The tweeter is secured to the baffle plate with two screws from the inside. To remove the tweeter, first remove the baffle plate.

● Reassembly

When reassembling the tweeter, ⊕ terminal is in the topside.

Network Assy (Caution)

When removing the Network Assy, pull it out a little at a time from alternate sides, because it is seated tightly.

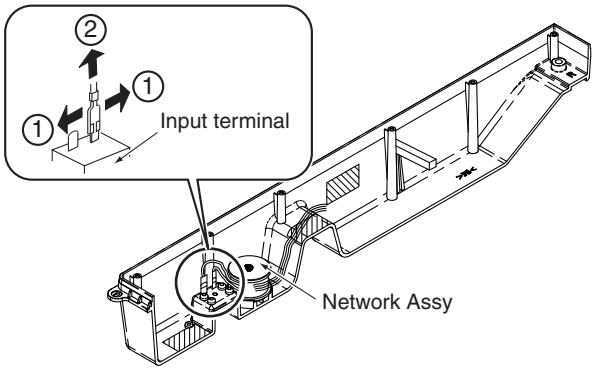

Baffle Assy (Caution)

When reassembling the cabinet and the baffle plate, secure the screws in the order shown in the figure below:

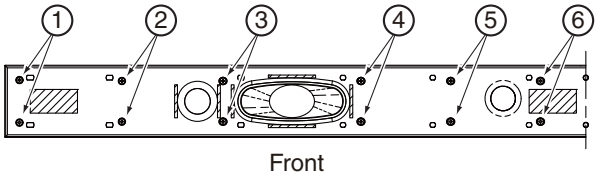

8. EACH SETTING AND ADJUSTMENT

1. At shipment, the unit is adjusted to its best conditions. Normally, it is not necessary to readjust even if an assembly is replaced. If the adjustment is shifted or if it becomes necessary to readjust because of part replacement, etc., perform the adjustment as described below.
2. Any value changed in Service/Factory mode will be stored in memory as soon as it is changed. Before readjustment, take note of the original values for reference in case you need to restore the original settings.
3. Use a stable AC power supply.

8.1 ADJUSTMENT REQUIRED WHEN THE UNIT IS REPAIRED OR REPLACED

■ When any of the following assemblies is replaced

POWER SUPPLY Unit	Refer to “8.3 HOW TO CLEAR HISTORY DATA” .
DIGITAL Assy	Writing of backup data is required. Refer to the “8.2 BACKUP OF THE EEPROM (DIGITAL ASSY)”.
X DRIVE Assy	No adjustment required
Y DRIVE Assy	No adjustment required
Service Panel Assy	Refer to “8.3 HOW TO CLEAR HISTORY DATA” and “8.4 ADJUSTMENTS WHEN THE SERVICE PANEL ASSY IS REPLACED”.
MAIN Assy (*)	Execute section [4-5] AUTO ADJUSTMENT of 6.2 [4] INITIALIZE.
IO AUDIO Assy	Execute section [4-5] AUTO ADJUSTMENT of 6.2 [4] INITIALIZE.
PANEL SENSOR Assy	No adjustment required Backup data are automatically copied during the next power-off.
Other assemblies	No adjustment required

(*) : When replacing the MAIN Assy, be sure to perform the FINAL SETUP.

■ When any of the following assemblies is repaired

Notes on replacing parts

For the parts described in the list below, replacement is required for the whole Assy, not only the defective part.
If any part listed below is identified as defective and needs replacement, replace the whole Assy, and make necessary adjustments after replacement.

PCB Assy No.	Assy Name	Parts that Require Whole-Assy Replacement		
		Ref No.	Function Name	Part No.
AWV2554	MAIN Assy	IC5002	EEPROM	BR24L02FV-W
		IC5003	EEPROM	BR24L02FV-W
		IC5004	EEPROM	BR24L02FV-W
		IC7301	EEPROM	BR24L02FV-W
		IC6001	System IC	BCM7404XKPB11G
		IC7004	EEPROM	BR24L64F-W
		IC6201	DDR SDRAM	EDD5116AFTA-5B-E
		IC6202	DDR SDRAM	EDD5116AFTA-5B-E
		IC6203	DDR SDRAM	EDD5116AFTA-5B-E
		IC6204	DDR SDRAM	EDD5116AFTA-5B-E
		IC6403	Flash ROM	AGC1082
		IC6701	Flash ROM	AGC1078
		IC6811	Flash UCOM	AGC1072
		IC7202	Flash ROM	AGC1073
AWW2543	DIGITAL Assy	IC3302	Flash ROM	AGC1071
		IC3601	Flash UCOM	AGC1070
AWW1359	PC Assy	IC8802	EEPROM	BR24L01AFJ-W
AWV2546	X DRIVE Assy	• Parts of X D-D CON BLOCK		
AWV2547	Y DRIVE Assy	• Parts of Y VF D-D CON BLOCK 1 • Parts of Y MAIN D-D CON BLOCK 1 • Parts of Y MAIN D-D CON BLOCK 2		

Reason: The whole Assy must be replaced, because adjustments and data rewriting for the Assy at the level of production line are required.

For the parts described in the table below, replacement of individual parts is difficult, because a heat pad is provided under the bottom of the ICs.

PCB Assy No.	Assy Name	Parts that Require Whole-Assy Replacement		
		Ref No.	Function Name	Part No.
AWV2554	MAIN Assy	IC4501	DC/DC Converter	LTC3407EMSE-2
		IC4901	HDMI Rx	SII9125CTU
		IC5501	Demodulator	MN884350
AWW1352	IO AUDIO Assy	IC8401	Digital Amp	TAS5122DCA

POWER SUPPLY Unit	➡	The assembly must be replaced as a unit, and no part replacement is allowed.
MAIN Assy	➡	No adjustment is required after replacement of parts other than those shown in “8.7 ADJUSTMENT WHEN THE MAIN OR IO_AUDIO ASSY IS REPLACED.
IO AUDIO Assy	➡	No adjustment is required after replacement of parts other than those shown in “8.7 ADJUSTMENT WHEN THE MAIN OR IO_AUDIO ASSY IS REPLACED.
DIGITAL Assy	➡	No adjustment required
X DRIVE Assy	➡	No adjustment is required after replacement of parts other than those shown in “8.5 ADJUSTMENT WHEN THE DRIVE ASSYS ARE REPLACED.
Y DRIVE Assy	➡	No adjustment is required after replacement of parts other than those shown in “8.5 ADJUSTMENT WHEN THE DRIVE ASSYS ARE REPLACED.
ADDRESS Assy	➡	No adjustment required
PANEL SENSOR Assy	➡	No adjustment required
Other assemblies	➡	No adjustment required

8.2 BACKUP OF THE EEPROM (DIGITAL ASSY)

Outline

Adjustment data are stored in the EEPROM on the DIGITAL Assy in the production process. Those adjustment data are also automatically stored in the EEPROM (for backup) on the PANEL SENSOR Assy.
If the DIGITAL Assy is replaced, those adjustment data for backup can be copied from the EEPROM on the PANEL SENSOR Assy to a new DIGITAL Assy.

Backed up data

- Drive voltage adjustment value
- Panel white balance adjustment value
- Drive waveform adjustment value
- Hour-meter count
- Pulse-meter count
- P-ON counter value
- Serial No.
- PD/SD histories

How to copy backup data

1. When the DIGITAL Assy is replaced with one for service (usual service)

Immediately after the DIGITAL Assy is replaced, the EEPROM on the DIGITAL Assy is in the status "adjustment not completed," and the EEPROM for backup on the PANEL SENSOR Assy is in the status "adjustment completed." The LED on the main unit warns you that the adjustment data in the EEPROM for backup have not been copied to the EEPROM on the DIGITAL Assy, by lighting the red LED and flashing the blue LED. In such a case, the adjustment data for backup can be used by copying the data to the EEPROM on the DIGITAL Assy, with the following procedures:

(1) Copying, using the Factory menu

① Turn on the power.
② Enter the Panel Factory mode.
③ Display the PANEL INFORMATION page, then check if "NO DATA!" is set for "DIG. EEP" and "ADJUSTED" is set for "BACKUP".
④ Copy the backup data, as shown in the figure below.

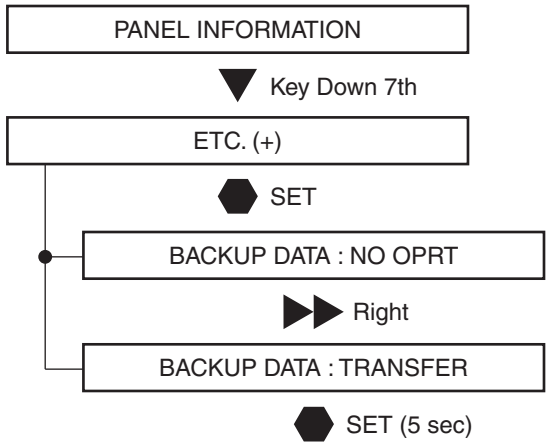

⑤ Check if "ADJUSTED" is set for "DIG. EEP" on the PANEL INFORMATION page.
⑥ Turn off the power.

(2) Copying, using the RS-232C commands

① Turn on the power.
② Issue the FAY command.
③ With the QS2 command, confirm that the main unit adjustment flag is "adjustment not completed" and that the adjustment backup flag is "adjustment completed."
④ Issue the BCP command to transfer the data stored in the EEPROM for backup.
⑤ With the QS2 command, confirm that the main unit adjustment flag becomes "adjustment completed."
⑥ Turn off the power.

Note: If both the DIGITAL and PANEL SENSOR Assys are to be replaced, replace the PANEL SENSOR Assy first in order to store the backup data. Then turn the unit on then back off again, then replace the DIGITAL Assy.

2. When manual adjustment is required after the DIGITAL Assy is replaced with one for service

If backup data cannot be transferred to the DIGITAL Assy because of defective parts, etc., after the DIGITAL Assy is replaced and manual adjustment is performed, those manually adjusted data can be registered as adjusted data with the following procedures. Once the data on the DIGITAL Assy are registered as adjusted data, the adjustment data for backup will be automatically updated each time the unit is turned off. Therefore, if a DIGITAL Assy with adjusted data is mounted on the unit, the following procedures are not required, even after manual adjustment.

(1) Copying, using the Factory menu

① Turn on the power.
② Enter the Panel Factory mode.
③ Display the PANEL INFORMATION page, then check if "NO DATA!" is set for "DIG. EEP".
④ Register the changed adjustment data as adjusted data, as described for the following procedures, then transfer them as backup data.

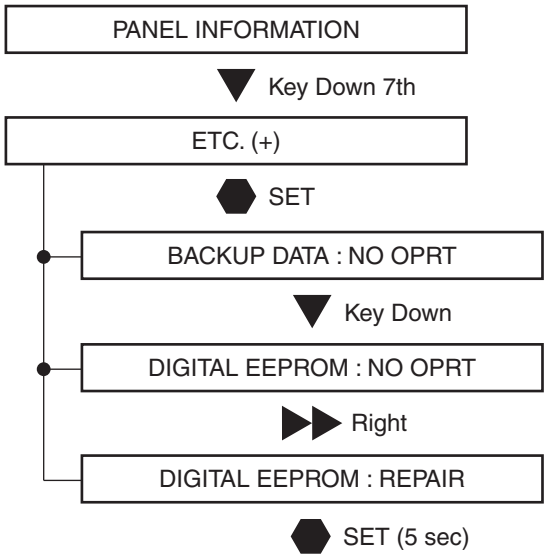

⑤ Check if "ADJUSTED" is set for "DIG. EEP" on the PANEL INFORMATION page.
⑥ Turn off the power.

(2) Copying, using the RS-232C commands

① Turn on the power.
② Issue the FAY command.
③ With the QS2 command, confirm that the main unit adjustment flag is "adjustment not completed."
④ Issue the FAJ command to register the changed adjustment data as adjusted data then transfer them as backup data.
⑤ With the QS2 command, confirm that the main unit adjustment flag becomes "adjustment completed."
⑥ Turn off the power.

3. When a secondhand DIGITAL Assy is to be reused

A DIGITAL Assy in good condition that had been mounted in another product can be reused. Before reuse, by following the procedures described below, make the data in the EEPROM on the DIGITAL Assy "adjustment not completed" data in order to prevent accidental updating of backup data when the secondhand DIGITAL Assy is mounted in another product

(1) Copying, using the Factory menu

① Turn on the power.
② Enter the Panel Factory mode.
③ Display the PANEL INFORMATION page, then check if "ADJUSTED" is set for "DIG. EEP".
④ Make the data in the EEPROM on the DIGITAL Assy "adjustment not completed" data, by following the procedures below:

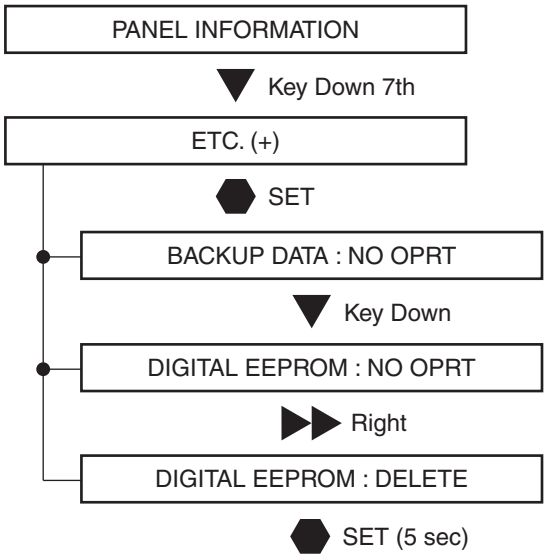

⑤ Check if "NO DATA!" is set for "DIG. EEP" on the PANEL INFORMATION page.
⑥ Turn off the power.

(2) Copying, using the RS-232C commands

① Turn on the power.
② Issue the FAY command.
③ With the QS2 command, confirm that the main unit adjustment flag is "adjustment completed."
④ Issue the UAJ command to make the data in the EEPROM on the DIGITAL Assy "adjustment not completed" data.
⑤ With the QS2 command, confirm that the main unit adjustment flag becomes "adjustment not completed."
⑥ Turn off the power.

Note: If you mount a secondhand Assy to the product without performing the above procedures, the adjustment data and logs for the main unit specific to the product will be erased, and those of the secondhand Assy will be copied when the unit is turned off.

8.3 HOW TO CLEAR HISTORY DATA

■ Clearance of various logs after the Assys are replaced

Besides adjustment data, data on accumulated power-on time and logs on defective parts of the product are backed up.
Some of those data must be cleared after the Assys are replaced for service.
Clearance of those data can be performed in the ETC layer of the Factory menu or with RS232C commands.

Item	Content	Clearing at the Replacement			Clearing method	
		Panel	POWER SUPPLY Unit	Other parts	Factory Menu (ETC layer)	RS-232C Commands
Hour-meter	Accumulated power-on time	Must be cleared	No need to be cleared	No need to be cleared	HR-MTR INFO.	CHM
Pulse-meter	Accumulated number of pulses emitted	Must be cleared (mandatory)	No need to be cleared	No need to be cleared	PM/B1-B5	CPM
Shutdown history of the panel	Causes and hour-meter values for the last eight shutdowns (SD) of the Panel	Must be cleared	No need to be cleared	No need to be cleared	SD INFO.	CSD
Power-down history	Causes and hour-meter values for the last eight power-downs (PDs) of the Panel	Must be cleared	No need to be cleared	No need to be cleared	PD INFO.	CPD
Power-on counter	Relay-on count	No need to be cleared	Must be cleared (mandatory)	No need to be cleared	P COUNT INFO.	CPC
MAX TEMP	Historical max. temperature of the panel	Must be cleared	Must be cleared	Must be cleared	MAX TEMP.	CMT

Notes:
- As the pulse-meter count is used for each correction function, the log must be cleared when the panel is replaced.
- After you clear the log, the unit must be turned off then back on again to reflect the cleared data for each correction function. If any adjustment is required after clearing the log, be sure to turn the unit off then back on again before adjustment.

(1) Clearance of logs, using the Factory menu

① Turn on the power.
② Enter the Panel Factory mode.
③ Clear the various logs, as shown in the figure below.

Note: The following example shows how to clear the PD log (PD INFO.). To clear other items, select each item you wish to clear then perform the same procedures.

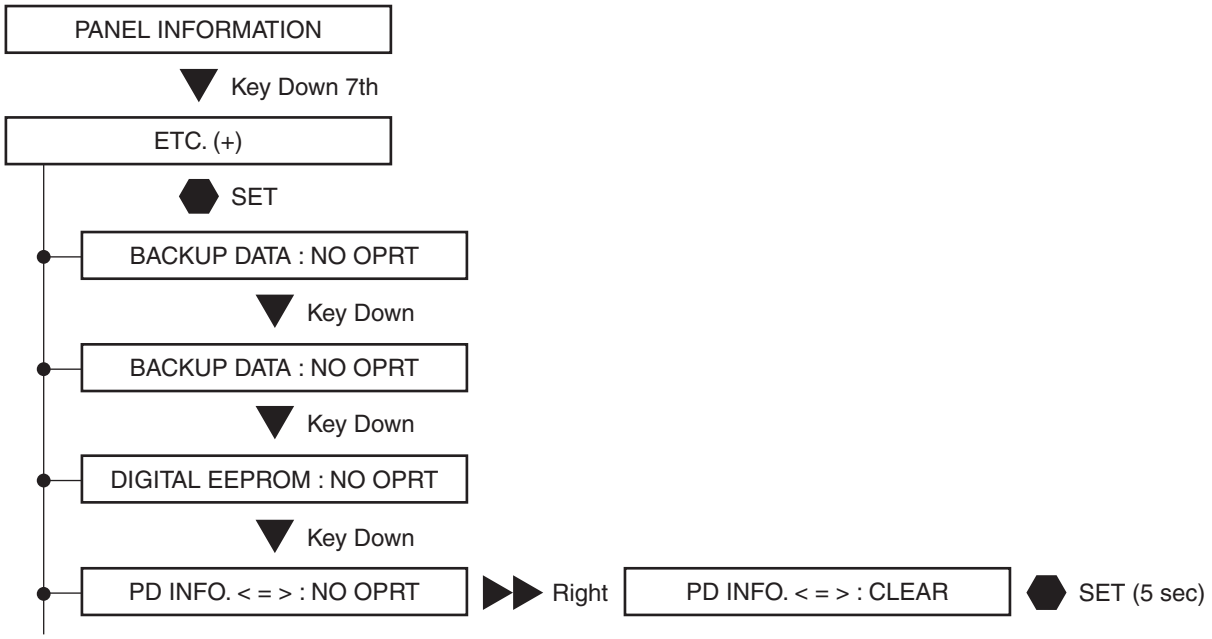

④ Turn off the power.

(2) Using the RS-232C commands

① Turn on the power.
② Issue the FAY command.
③ Issue the Delete command for a log you wish to clear.
④ Turn off the power.

8.4 ADJUSTMENT WHEN THE SERVICE PANEL ASSY IS REPLACED

After the panel is replaced with one for service, voltage margin adjustment is required.

[Preparation]

Basically, voltage margin adjustment is performed using the Panel Factory menu.
After the panel is replaced and the unit is turned on, clear the pulse meter first.
For details on how to clear the pulse meter, see "8.3 HOW TO CLEAR HISTORY DATA".

∗1: As various corrections are made referring to the pulse-meter count to calculate how long the panel has been used, if adjustment of the panel for service is performed without clearing the pulse-meter count, proper adjustments will not be performed.
∗2: The drive sequence for Video 60-Hz is used for adjustment. When adjustment is made using the Panel Factory menu, the current drive sequence is displayed on the screen, as shown in the figure below. Make sure that 60VS is always indicated during adjustment.

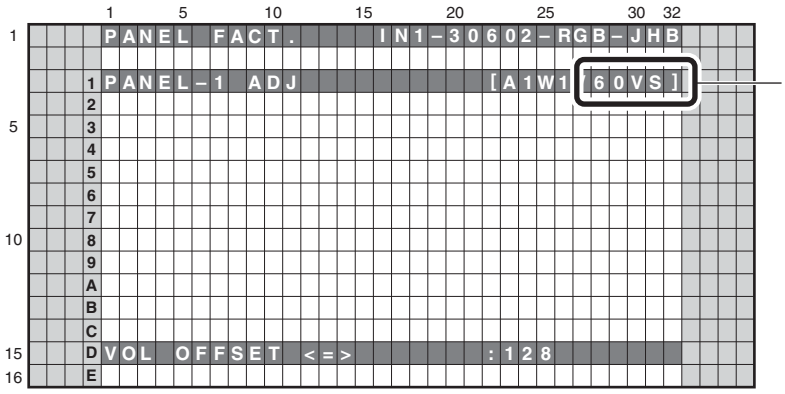

Example of the On-Screen display during Panel Factory mode

[Supplement]

In the "PANEL-1ADJ" layer, the Panel White Balance value is reset to default, Panel Gamma is set to Straight, Noise is set to OFF, LUT mode is set to ON and Reset active control is set to OFF.
If adjustment is performed using RS232C commands, unlike the case of Factory menu operation, adjustments are not interlocked. Therefore, settings must be performed individually, by issuing commands. (See the section on preparations before adjustment.)

Overview

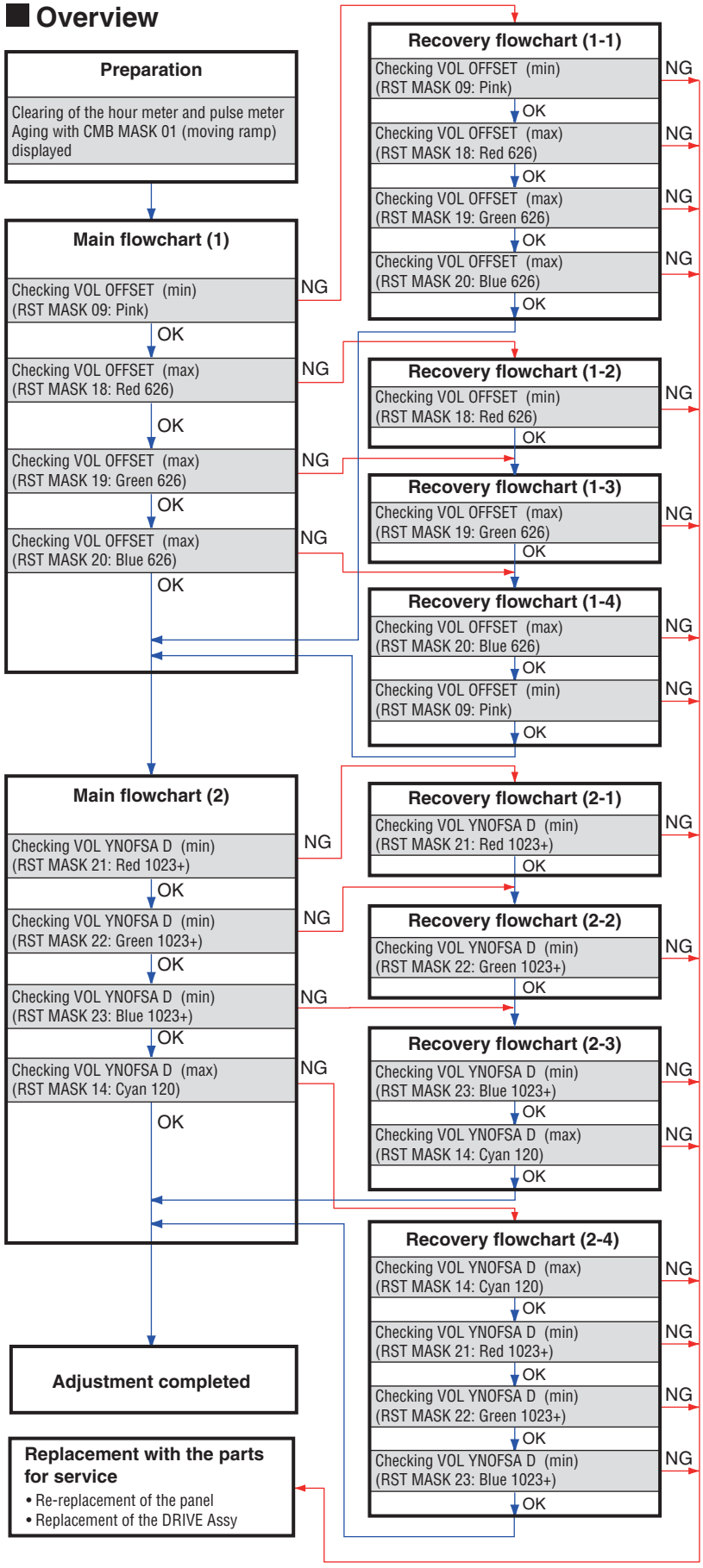

Range of margin measuring

Read the voltage within the hysteresis (stricter value).

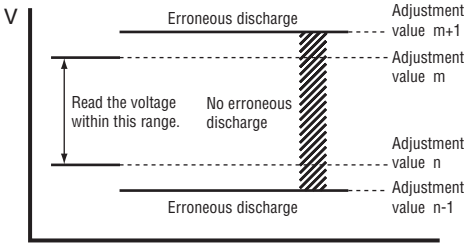

Definition of limits for the voltage margins (abnormal lit/dead cells)

Abnormal lit cells:

- Five or fewer abnormal cells on the whole screen
- Two or fewer abnormal cells within a radius of 1 cm

Abnormal dead cells

- Fifteen or fewer abnormal cells on the whole screen
- Two or fewer abnormal cells within a radius of 1 cm

*: Abnormal cells visually recognizable at a distance of 1 meter from the panel must be counted.
*: Cells displayed abnormally for less than one second are not counted as abnormal cells.

Definition of tones for the measuring signals

FHD signal (1920*1080)/Video 60-Hz sequence /Dither: ON, L dither: ON, noise: OFF

Pink	RST MASK 09 (R 1023 /G 626 /B 1023)
Cyan 120	RST MASK 14 (R 0 /G 120 /B 120)
Red 626	RST MASK 18 (R 626 /G 0 /B 0)
Green 626	RST MASK 19 (R 0 /G 626 /B 0)
Blue 626	RST MASK 20 (R 0 /G 0 /B 626)
Red 1023+	RST MASK 21 (R 1023 /G 120 /B 120)
Green 1023+	RST MASK 22 (R 120 /G 1023 /B 120)
Blue 1023+	RST MASK 23 (R 120 /G 120 /B 1023)

Interlocked settings for Voltages Vyknofs1/3/4

For the 9th-generation PDPs, interlocked setting for Voltages Vyknofs1/3/4 is available on the Factory menu or with RS232C commands, for easier adjustment. Therefore, in the adjustment flowchart, the interlocked setting function is used. (Individual setting for each adjustment value is also possible, as in the conventional setting methods.

Set Voltage	Factory Menu	Command
Vyknofs1 individual	VOL YNOFS1 D	[V1F]
Vyknofs3 individual	VOL YNOFS3 D	[V3F]
Vyknofs4 individual	VOL YNOFS4 D	[V4F]
Vyknofs1,3,4 interlocked	VOL YNOFSA D	[VYF]

Note:

- The initial value for the interlocked setting value is 128, including for factory preset values.
- See "[3] DRIVE ASSY" of "5.2 DIAGNOSIS FLOWCHART OF FAILURE ANALYSIS" for calculation of actually used voltage values.

Preparation before adjustment

[Replacement with the panel for service is completed.]

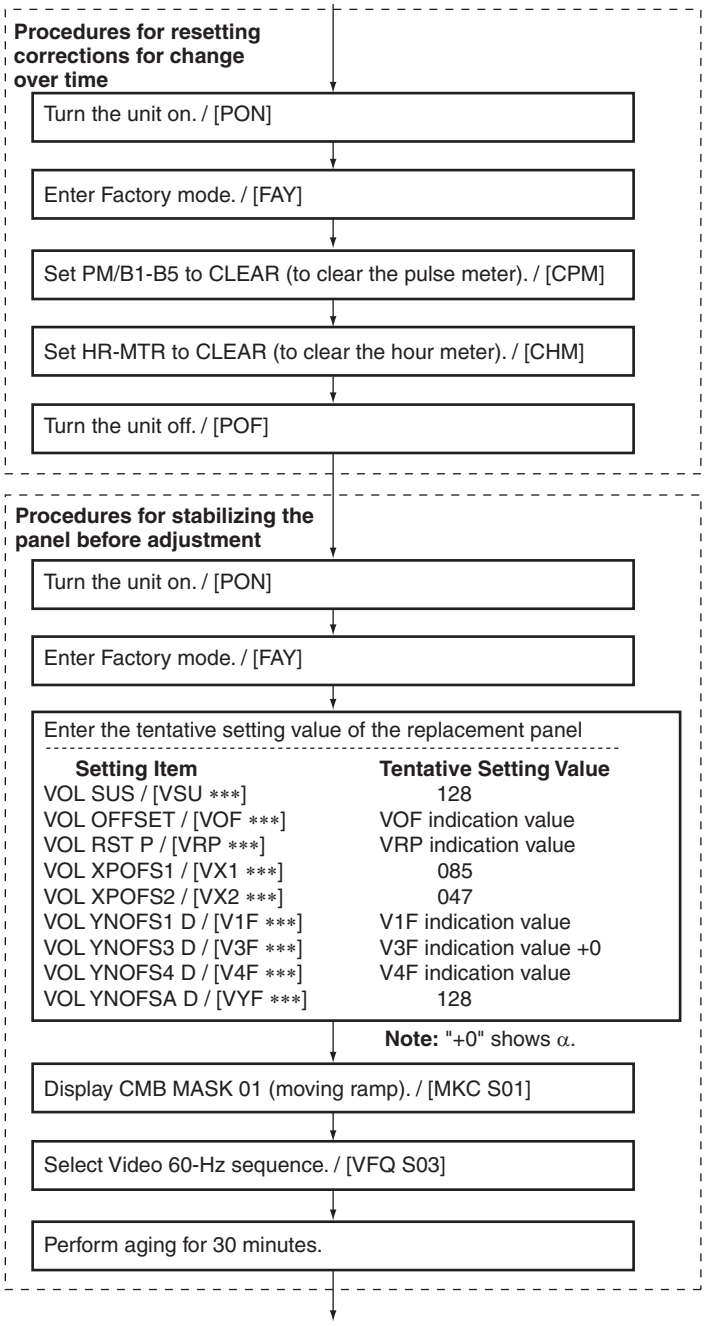

[To the Main flowchart (1)]

∗ To reflect the results of log clearing for each correction function, the unit must be turned off then back on again. Before adjustment, be sure to turn the unit off then back on again.

Indication example of the adjustment label of service panel

AWU1340 Data VOF=129
VRP=031 V1F=143 V3F=128+α
V4F=172 Hour Meter_ _ _ _ _ _ _ _ _ _ H
Data 08/02/28 Chassis CXX99999
Time 18:27 Pnl FD4A0808100123

Note: The symbol "α" denotes the adjustment value plus 0.

∗ Each setting value described on the adjustment label denotes an indicated data value but not a real voltage value. Therefore, just enter the data value as a setting value.

∗ To store the VFQ S03 command in memory, transmit it after displaying the mask.

Note:
* When you perform the adjustment with RS232C commands, issue the following commands in addition.
* If the unit is shut down in the middle of performing the adjustment flowchart, reissuing of the command is required.

[PAV S00] : To set panel drive mode to Factory
[VFQ S03] : To set Drive Sequence to Video 60-Hz
[WBI S01] : To temporarily reset the Panel WB adjustment value to default (WBI S00 cancels this setting.)
[PGR S00] : To set the gamma R value to that for Factory mode
[PGG S00] : To set the gamma G value to that for Factory mode
[PGB S00] : To set the gamma B value to that for Factory mode
[DIZ S03] : Dither ON, L dither ON, noise OFF.
[$1800000001] : LUT mode ON

Main flowchart (1)...Checking VOL OFFSET

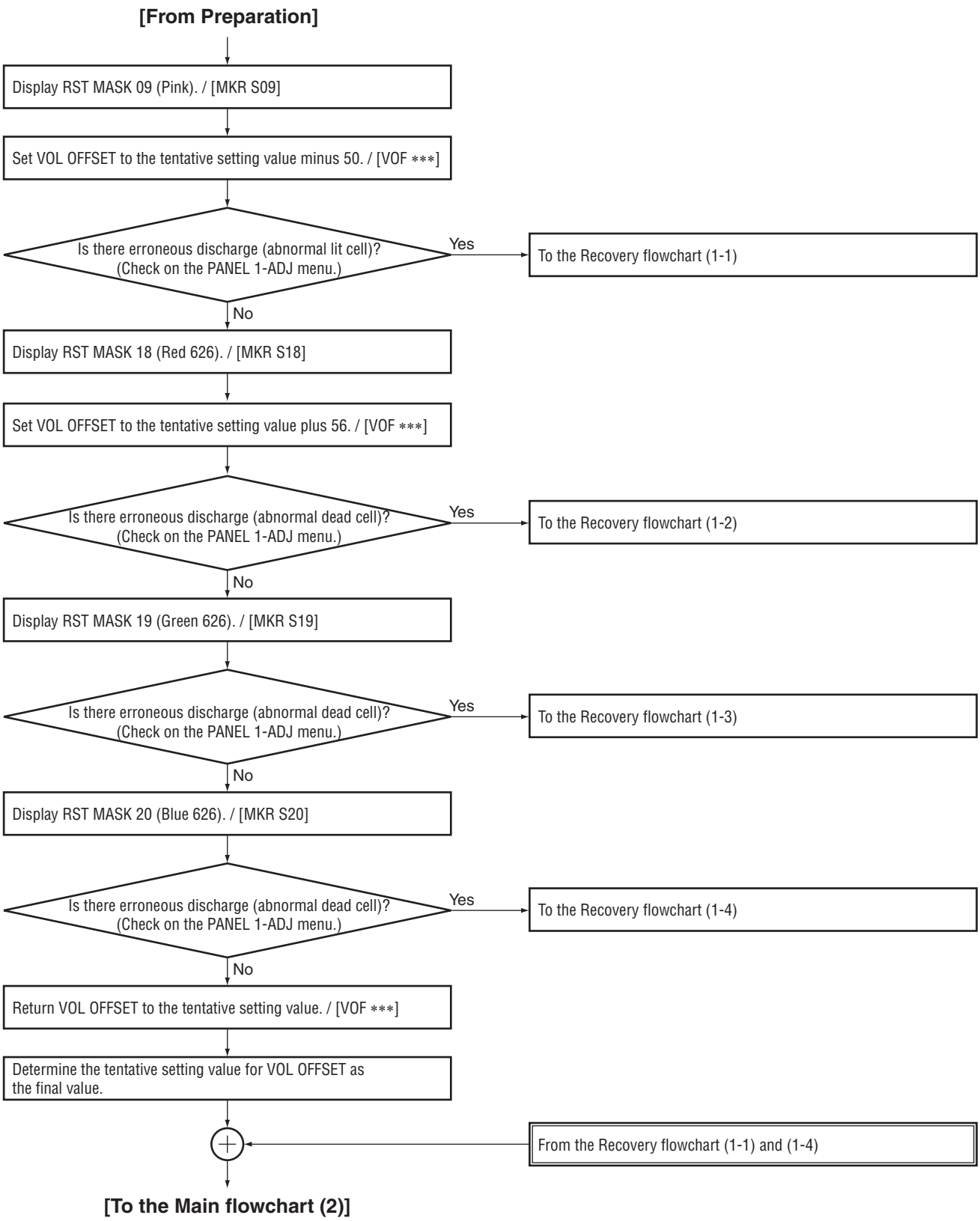

Main flowchart (2)...Checking VOL YNOFSA D

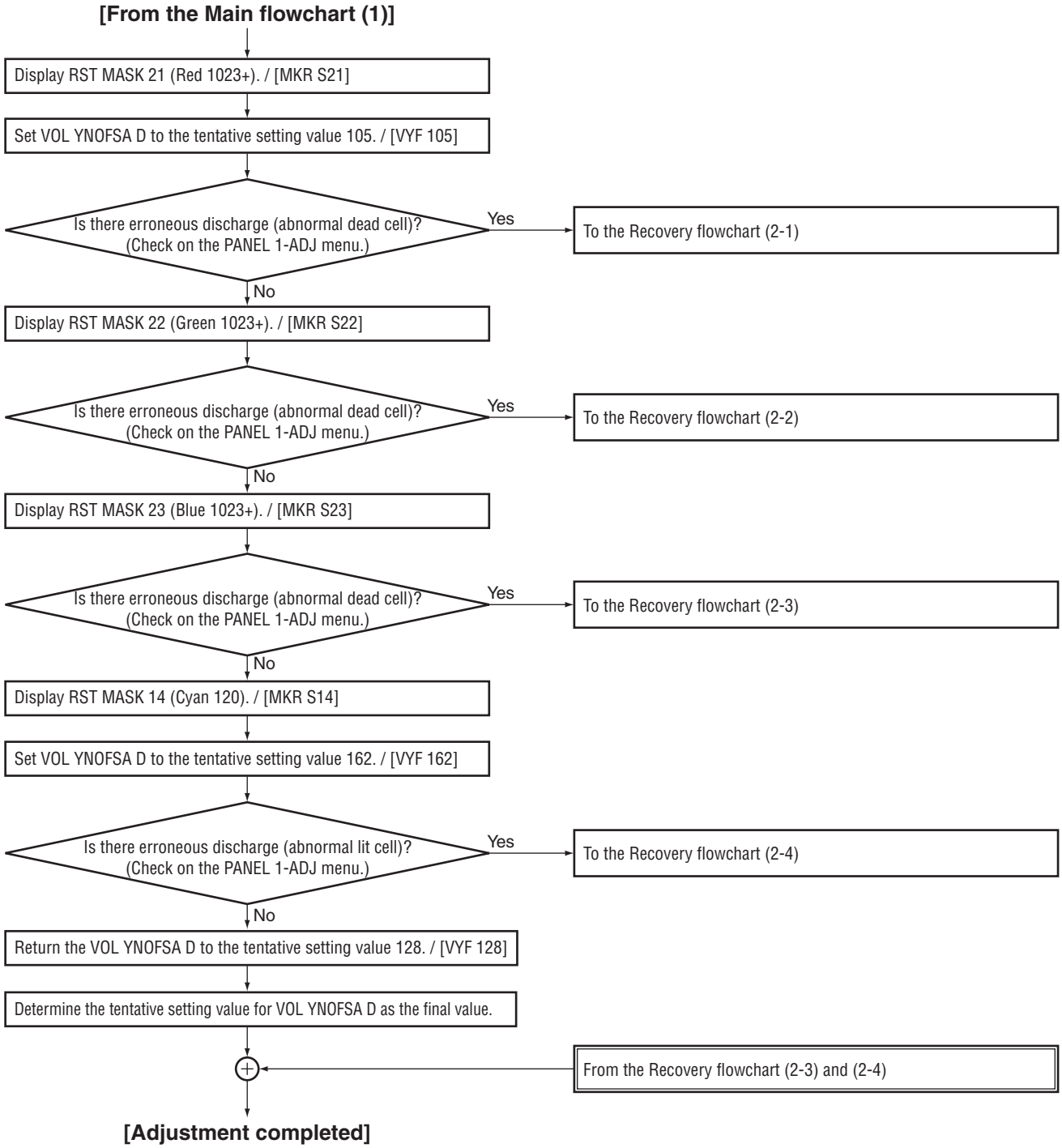

Note:
Make sure that the following values become the final setting values.

VOL SUS *1	VOL XPOSF2 *1
VOL OFFSET	VOL YNOFS1 D *1
VOL RST P *1	VOL YNOFS3 D *1
VOL XPOFS1 *1	VOL YNOFS4 D *1
	VOL YNOFS4 A

*1: The tentative setting value becomes the final value.

Recovery flowchart (1-1)...Changing the VOL OFFSET setting

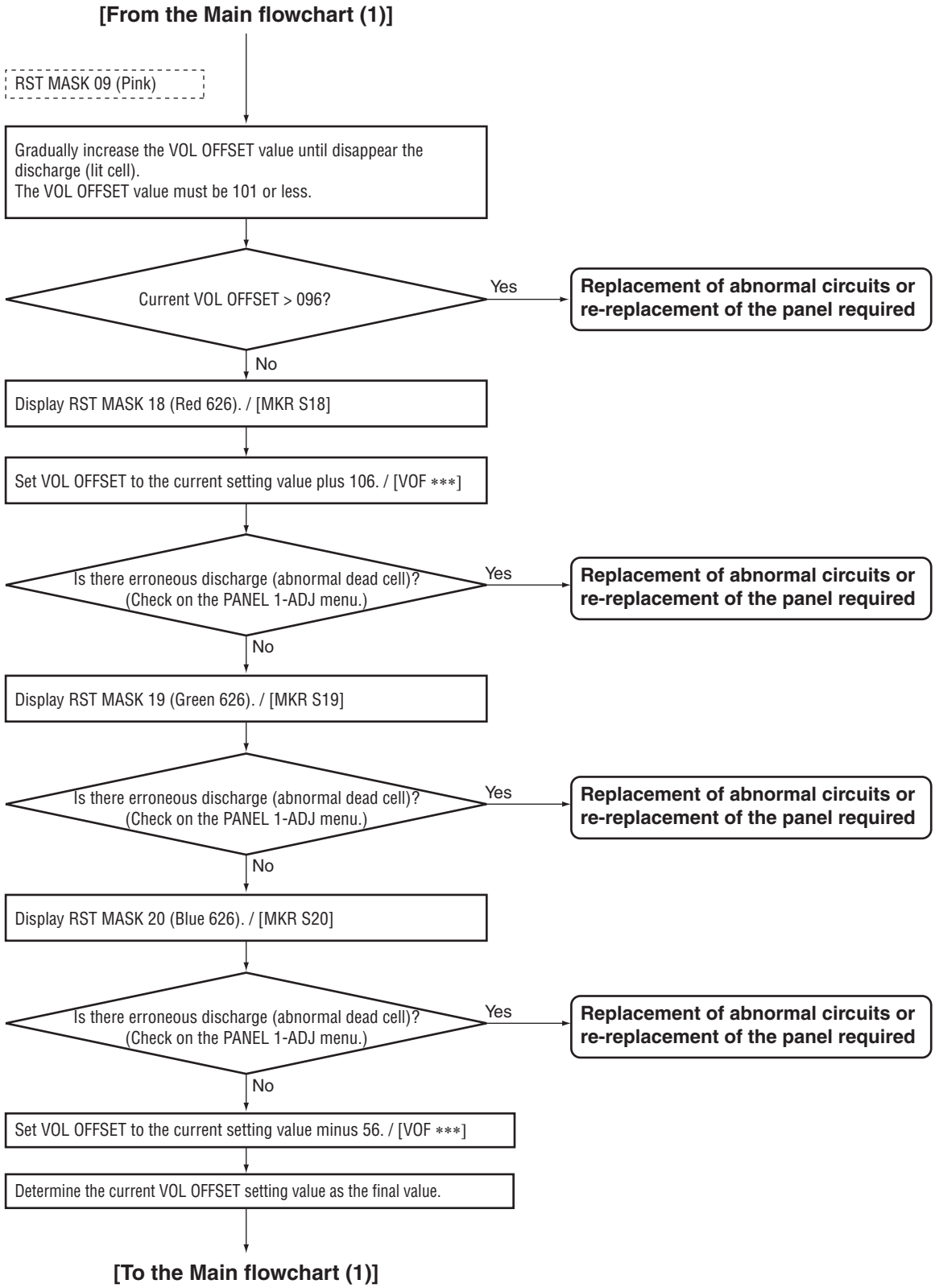

Recovery flowchart (1-2)...Changing the VOL OFFSET setting

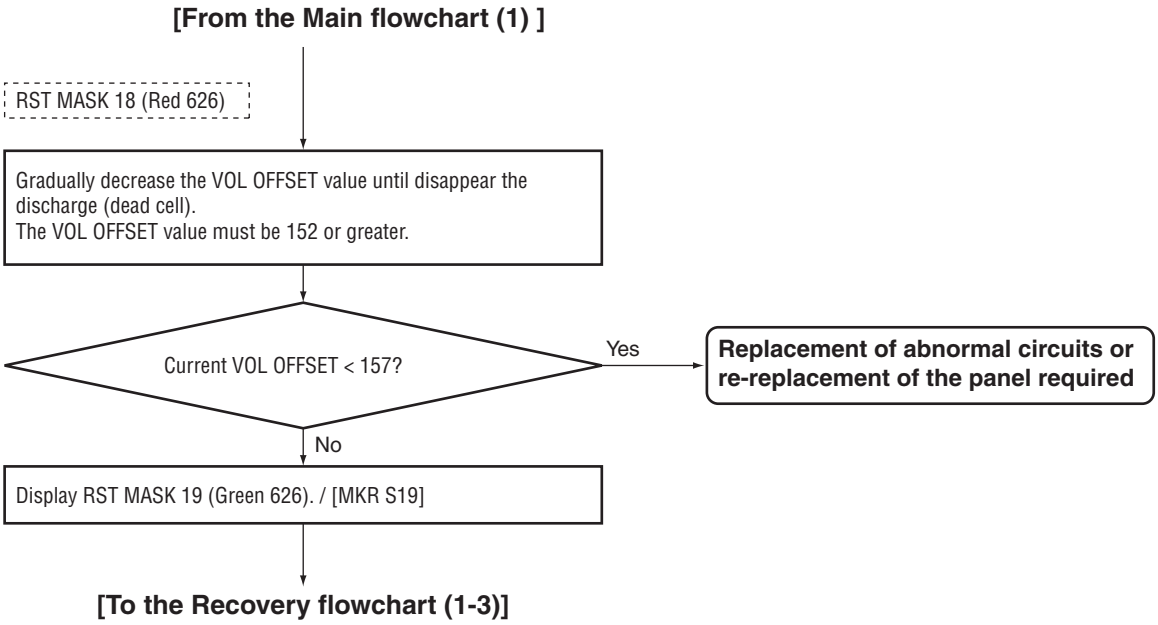

Recovery flowchart (1-3)...Changing the VOL OFFSET setting

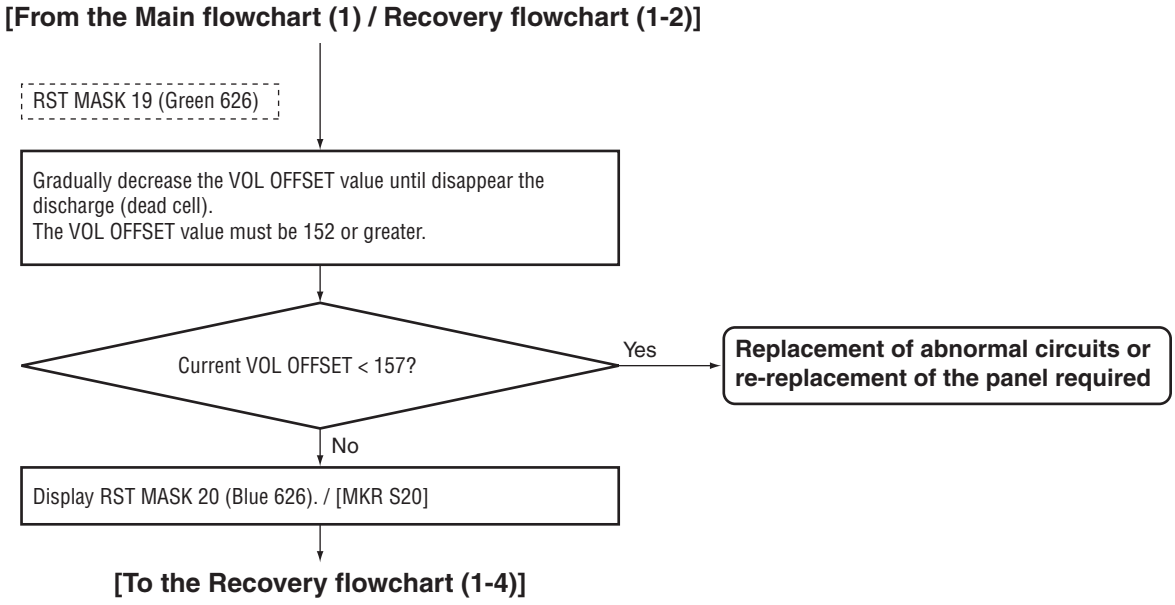

Recovery flowchart (1-4)...Changing the VOL OFFSET setting

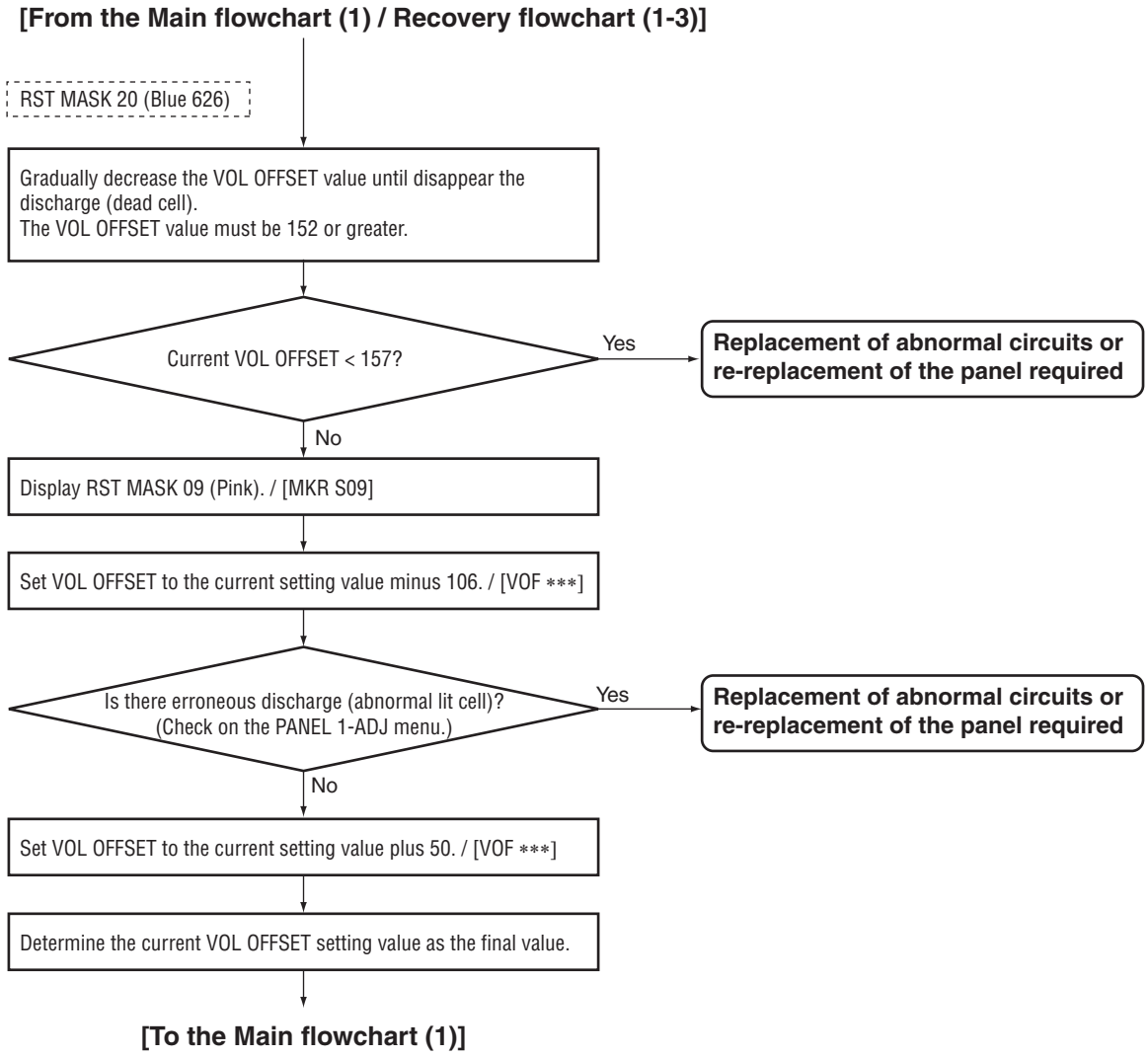

Recovery flowchart (2-1)...Changing the VOL YNOFSA D setting

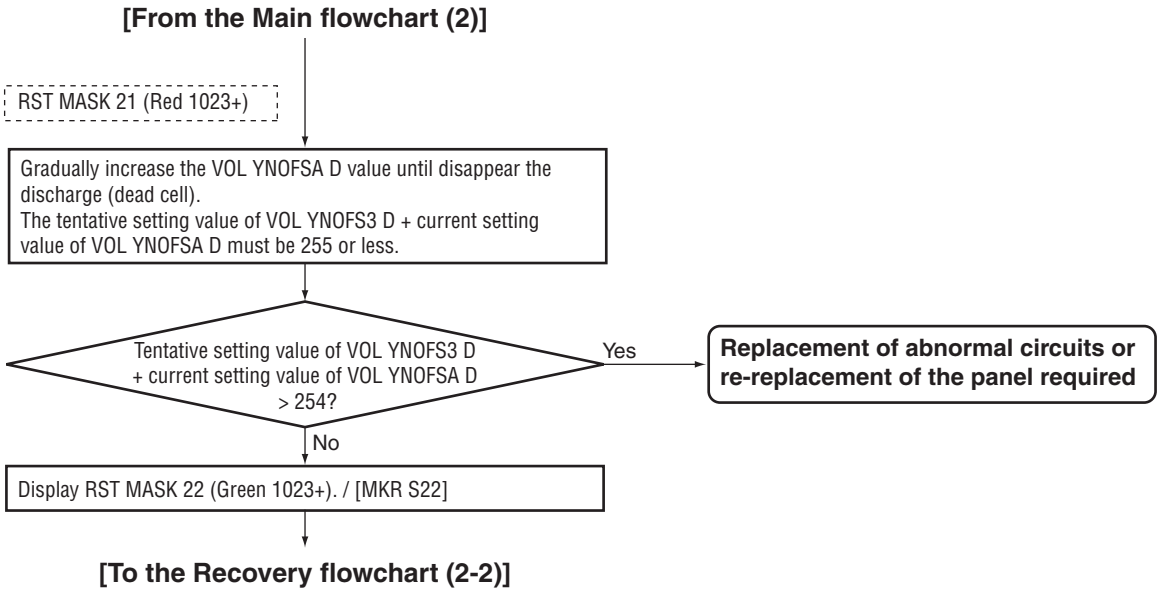

Recovery flowchart (2-2)...Changing the VOL YNOFSA D setting

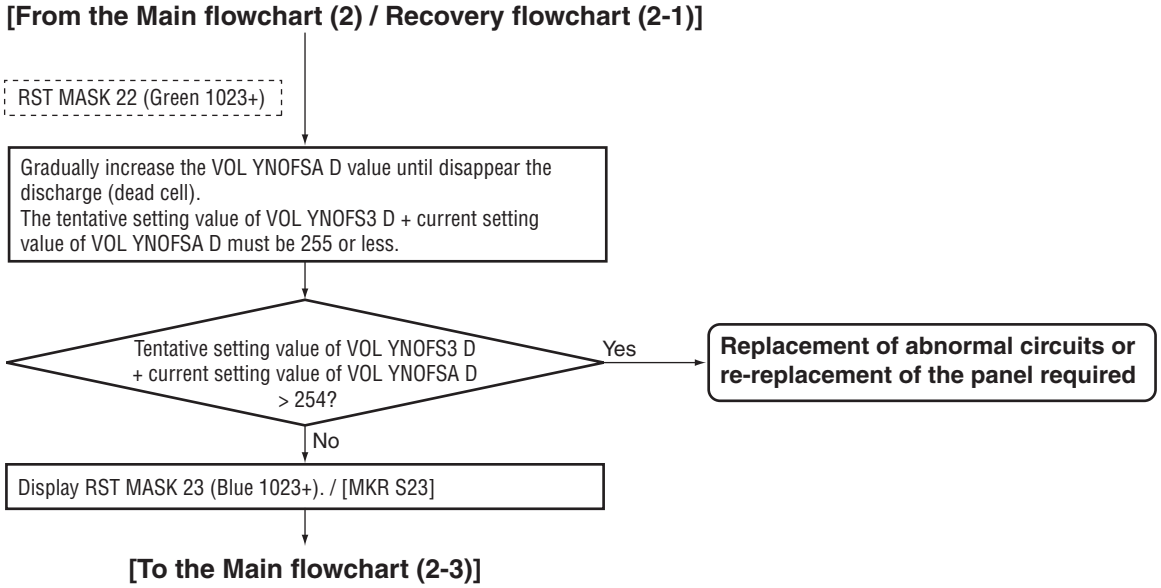

Recovery flowchart (2-3)...Changing the VOL YNOFSA D setting

[From the Main flowchart (2) / Recovery flowchart (2-2)]

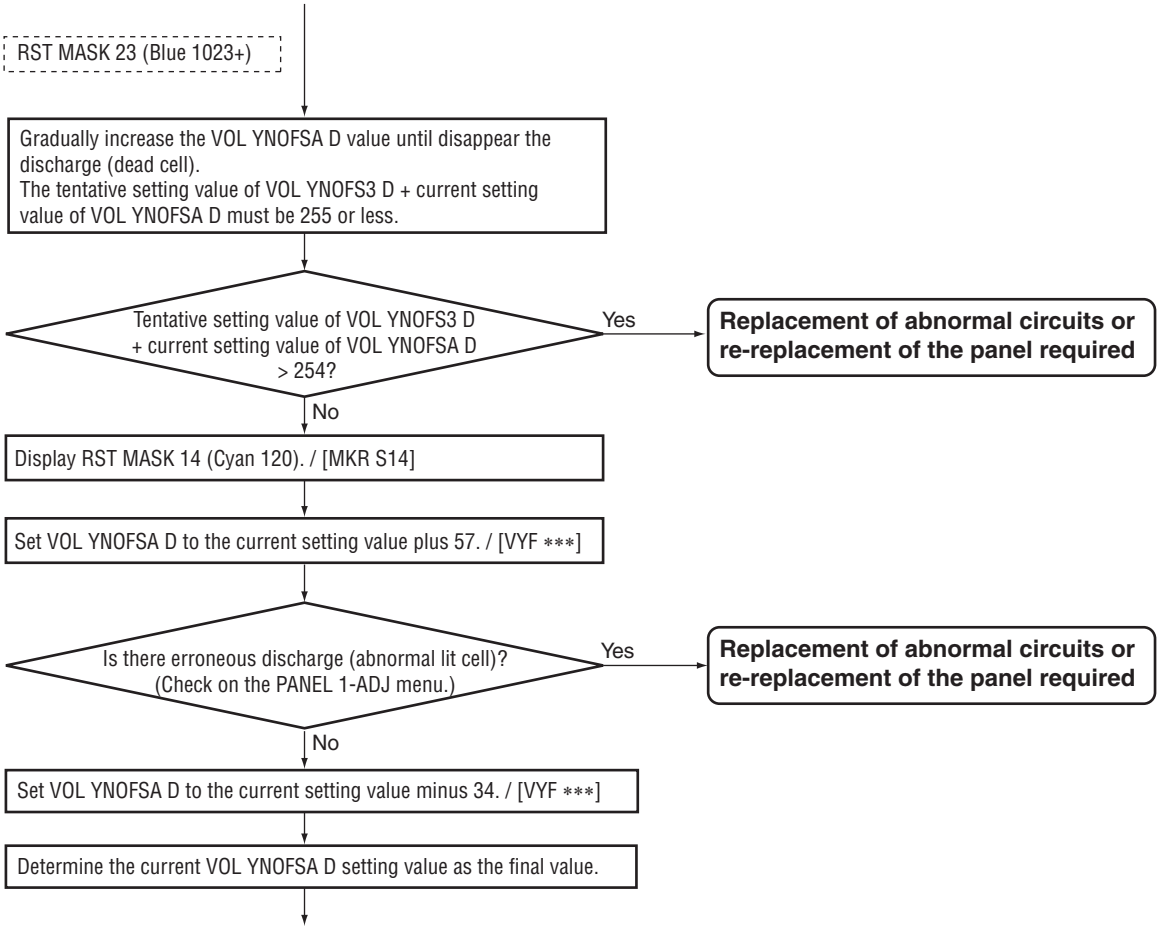

[To the Main flowchart (2)]

Recovery flowchart (2-4)...Changing the VOL YNOFSA D setting

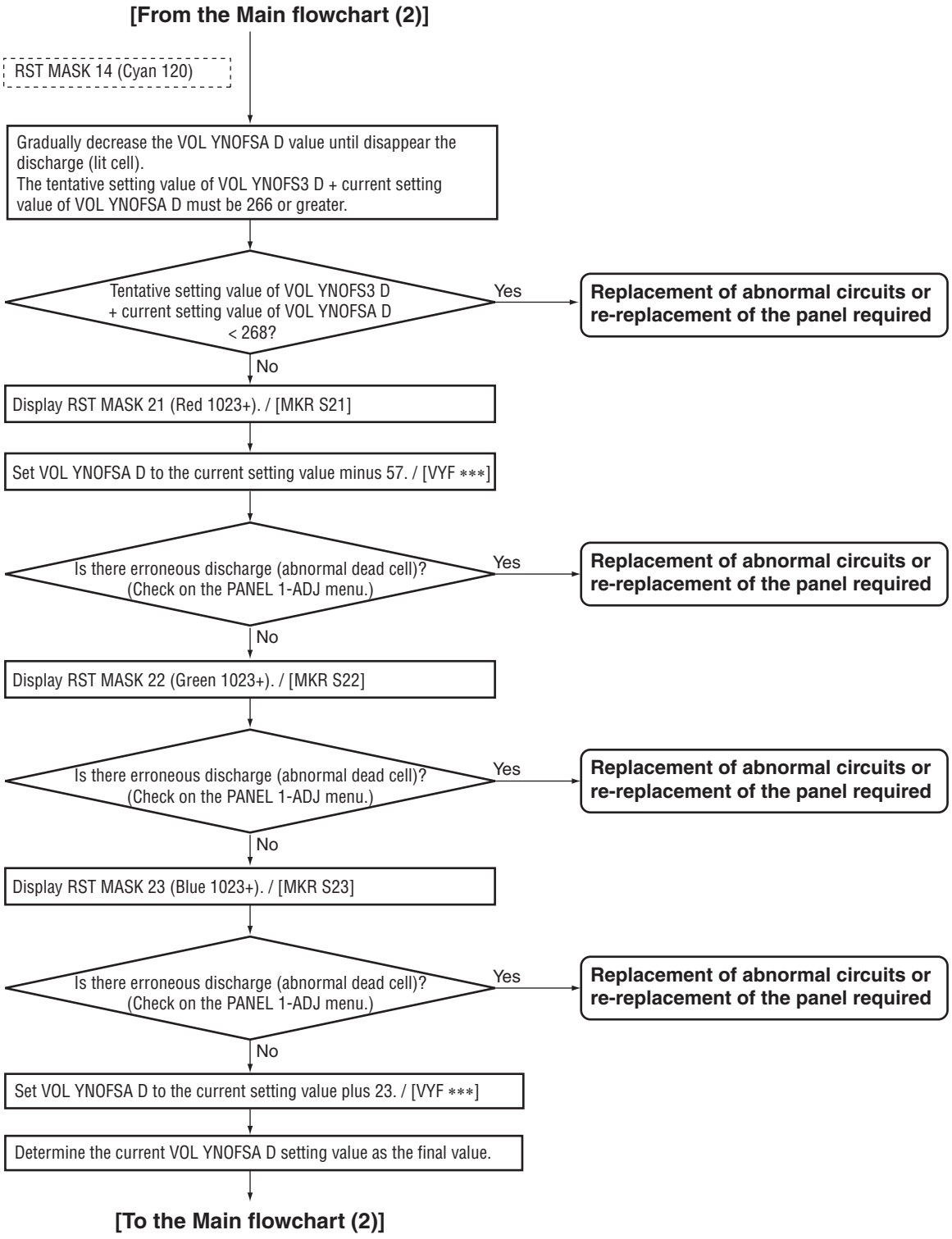

8.5 ADJUSTMENT WHEN THE DRIVE ASSYS ARE REPLACED

■ Waveform adjustments required when replacing the following parts of the X DRIVE and Y DRIVE Assys.

Assy Name	Ref No.	Part Name	Part Category	Remarks
X DRIVE Assy	IC1101	PS9818-1(P)	Photo Coupler	
	IC1104	TND307TD	FET Driver	
	IC1204	PS9818-2(P)	Photo Coupler	
	IC1209	TND307TD	FET Driver	
Y DRIVE Assy	IC2101	PS9818-1(P)	Photo Coupler	
	IC2103	TND307TD	FET Driver	
	IC2201	PS9818-1(P)	Photo Coupler	
	IC2203	TND307TD	FET Driver	

■ TIME LAG ADJUSTMENT OF THE CONTROL SIGNAL (SUS-B)

① Measure the time lag for the SUS-U signal to the SUS-B signal.
② Check the time lag for the SUS-B Gate signal to the SUS-U Gate siganl.
Adjust the variable control so that the time lag of Gate becomes " time lag of input signal + $\alpha \pm 5$ nsec."

Note: • Be sure to set the Drive to OFF for adjustment.
• For details on measuring points of waveform, see the figure below.

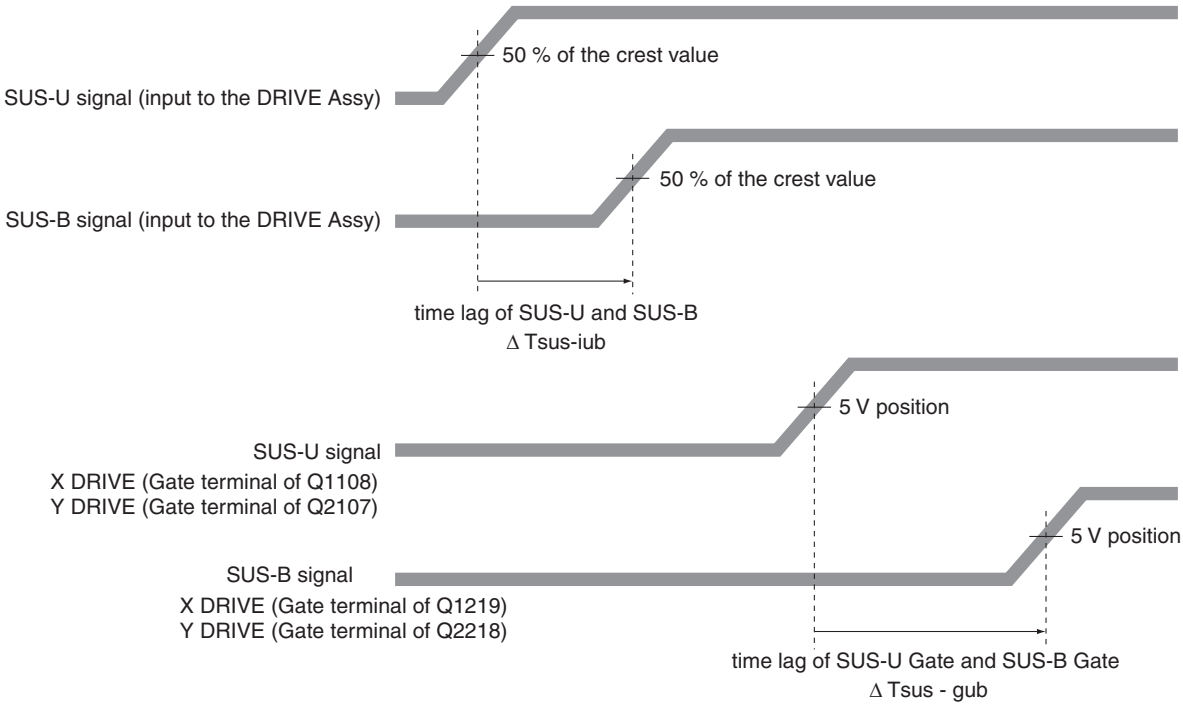

Time lag of SUS-U Gate and SUS-B Gate : Δ Tsus - gub
Adjust so that "Δ Tsus - gub = Δ Tsus - iub + $\alpha \pm 5$ nsec," using the variable controls shown in the table below:

Assy	VR	Value of α
X DRIVE Assy	VR1002	60 nsec
Y DRIVE Assy	VR2002	60 nsec

DELAY ADJUSTMENT OF THE CONTROL SIGNAL (SUS-D)

① Measure the pulse width of the SUS-D signal.
② Check the pulse width of the SUS-D input signal (gate terminal of Q2111).
Adjust the variable control so that the pulse width of the SUS-D input signal (gate terminal of Q2111) becomes the same pulse width ± 5 nsec as the SUS-D signal.

Note: • For details on measuring points of waveform, see the figure below.

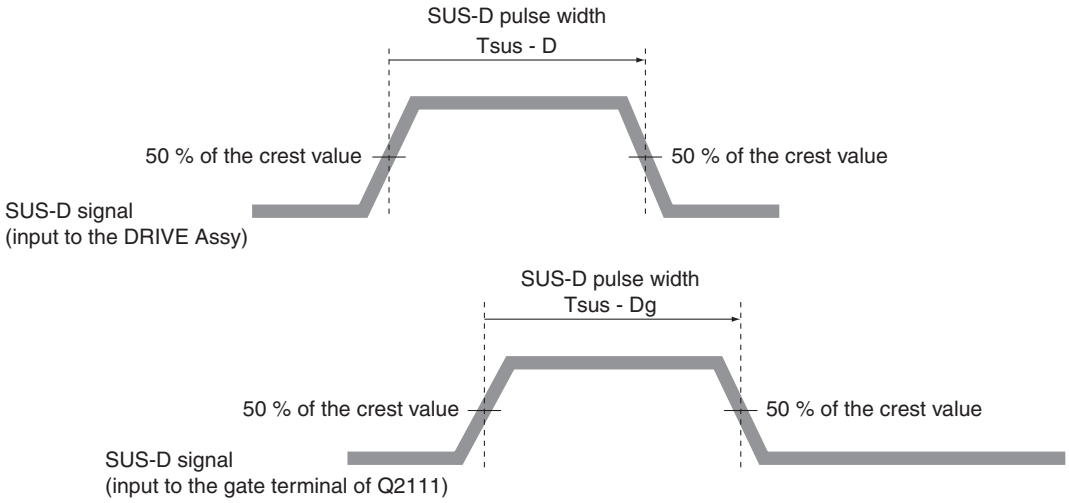

SUS-D pulse width: Tsus - Dg
Adjust so that "Tsus - Dg = Tsus - D ± 5 nsec," using the variable control shown in the table below:

Assy	VR
Y DRIVE Assy	VR2001

■ SUS-B ADJUSTMENT

X DRIVE Assy

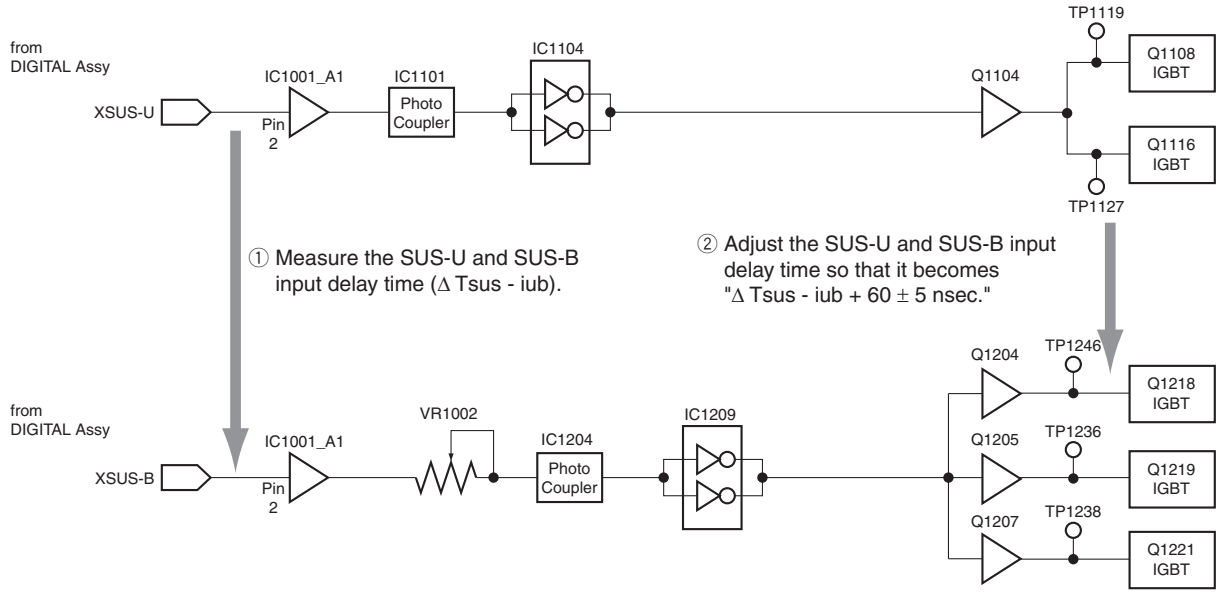

Y DRIVE Assy

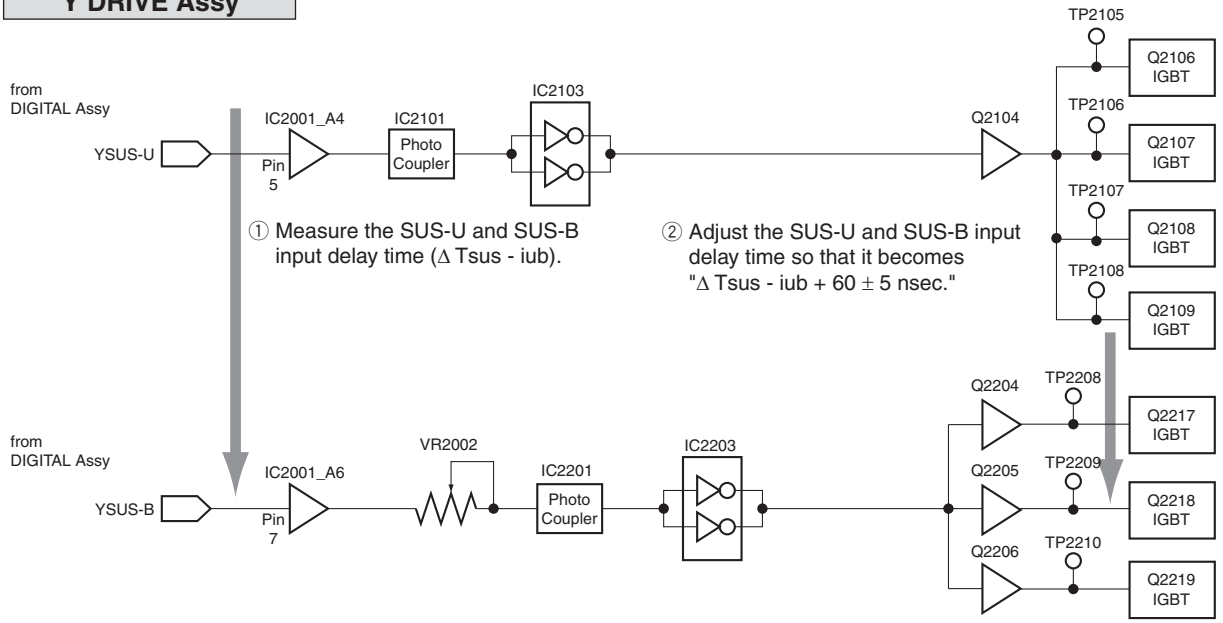

■ SUS-D ADJUSTMENT

Y DRIVE Assy

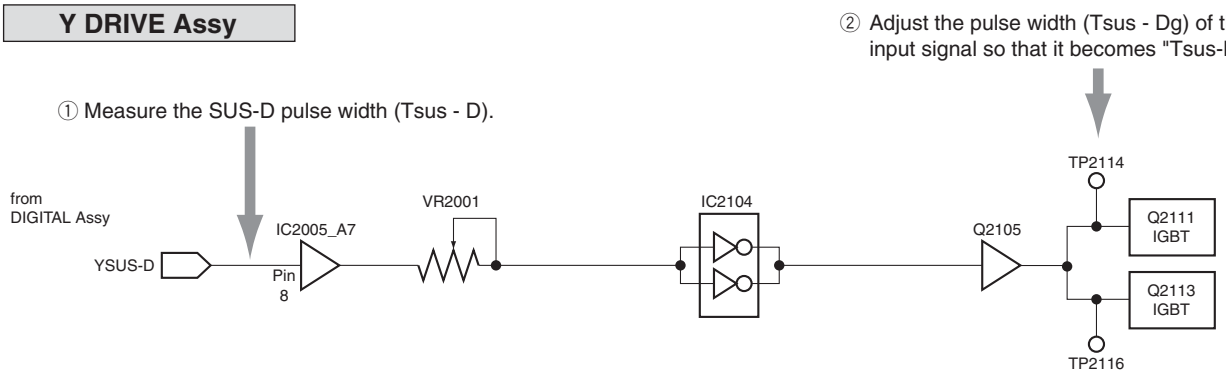

8.6 HOW TO UPDATE USB

Preparation

Expand the image-file folder for USB updating in the root directory of the USB memory device.

Example: Folder construction after expansion in the root directory of the USB memory device

(With the nonencrypted folder)	[update] boot.img update.ctl update.iso update.lst
(With the encrypted folder)	[update] boot.img update.ctl update.enc update.key update.lst

An encrypted image-file folder for USB updating will be released for general users.

Description of the figures

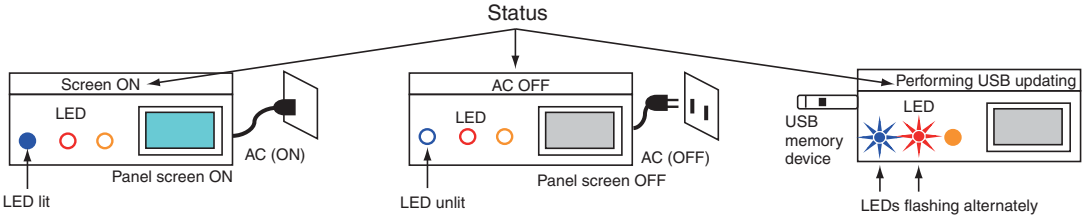

Procedures

1. Setting before USB updating

Change the power status of the Panel from Screen ON to AC OFF.

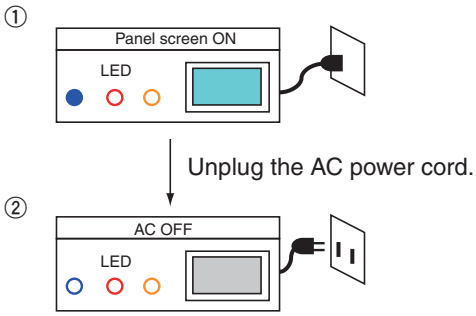

2. Performing USB updating

Connect the USB memory device then set the unit to AC ON.

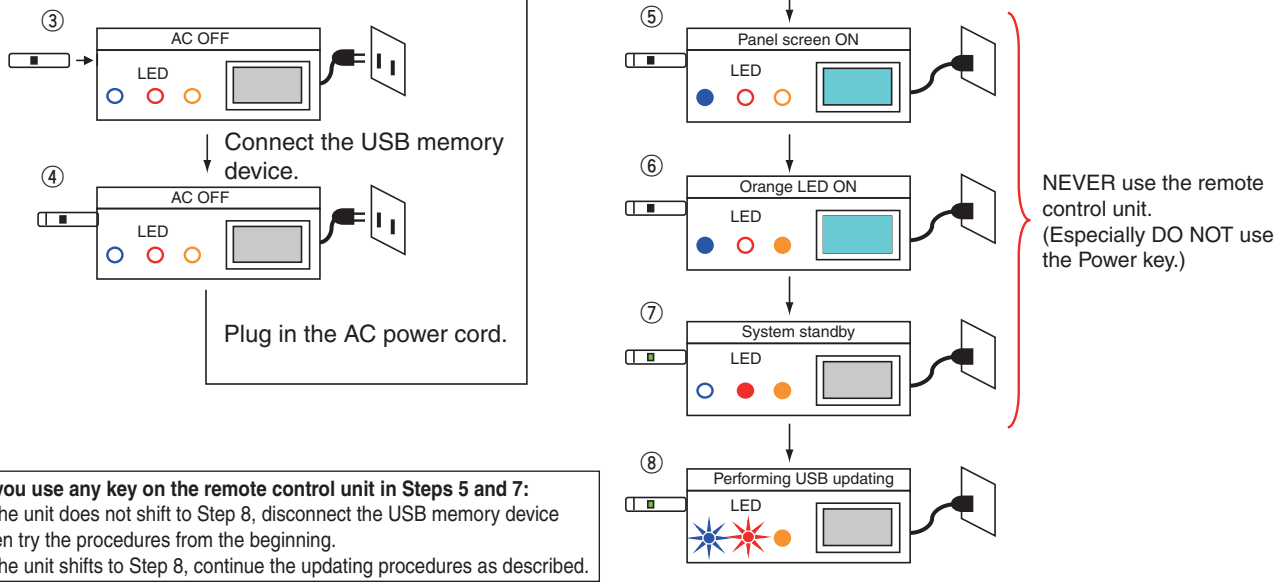

If you use any key on the remote control unit in Steps 5 and 7:
If the unit does not shift to Step 8, disconnect the USB memory device then try the procedures from the beginning.
If the unit shifts to Step 8, continue the updating procedures as described.

3. Completion procedures for USB updating

After USB updating is completed, perform the following steps (unplug the AC power cord, disconnect the USB memory device, then plug the AC power cord back in).

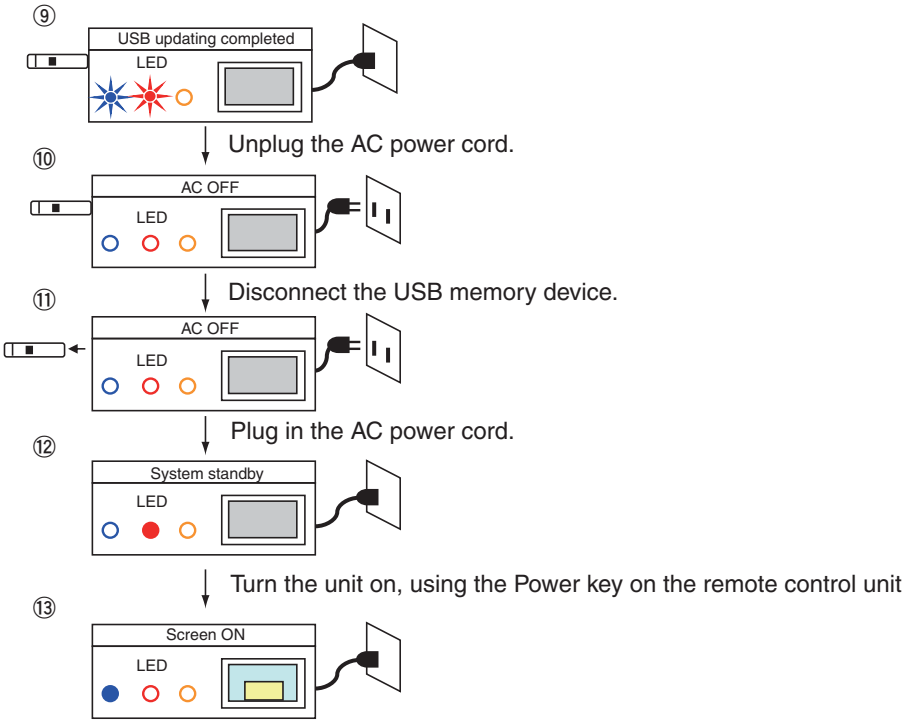

The GUI indicating that updating is completed is displayed.

List of frequency of LED flashing (orange) when updating fails

If updating is interrupted, the orange LED flashes to warn you of the error.

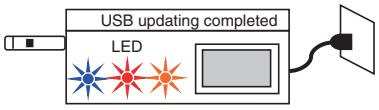

Frequency of Orange LED Flashing	Error Content	Details
1	(Not used)	
2	Version error	The same version or a newer version of software has already been loaded.
3	USB update startup error	Startup of USB updating failed.
4	DTV update error	Updating of the DTV software failed.
5	Main download error	Updating of the MAIN microcomputer software failed.
6	ARIA download error	Updating of the ASIC software in the previous stage failed.
7	ZEUS download error	Updating of the ASIC software in the later stage failed.
8	Module download error	Updating of the module microcomputer software failed.
9	IF download error	Updating of the IF microcomputer software failed.
10	USB disconnection	Abnormality in the USB memory device
11 to 13	Reserved	-
14	Destination error	The software for a different destination (Europe/North America/Australia) was used for updating.

Example: In a case where the orange LED flashes twice (version error)
Repetition of 1-sec flashing twice followed by a 2.5-sec pause (OFF)

8.7 ADJUSTMENT WHEN THE MAIN OR IO_AUDIO ASSY IS REPLACED

Explanation

To correct differences in IC output levels and signal levels upon AD conversion, adjustment is performed throughout the path. Therefore, if any of the following devices is replaced, the entire adjustment must be performed again.

IC8001	AV_SW	R2S11006FT
IC8101	RGB_SW	R2S11001FT
IC4702	VDEC	CM0048AF
IC4801	ADC	AD9985KSTZ-110

Adjustment Procedure

Perform the "AUTO ADJUSTMENT" on the "6.2 [4] INITIALIZE".

9. EXPLODED VIEWS AND PARTS LIST

NOTES:
- *Parts marked by "NSP" are generally unavailable because they are not in our Master Spare Parts List.*
- *The ⚠ mark found on some component parts indicates the importance of the safety factor of the part. Therefore, when replacing, be sure to use parts of identical designation.*
- *Screws adjacent to ▼ mark on product are used for disassembly.*
- *For the applying amount of lubricants or glue, follow the instructions in this manual. (In the case of no amount instructions, apply as you think it appropriate.)*

9.1 PACKING SECTION

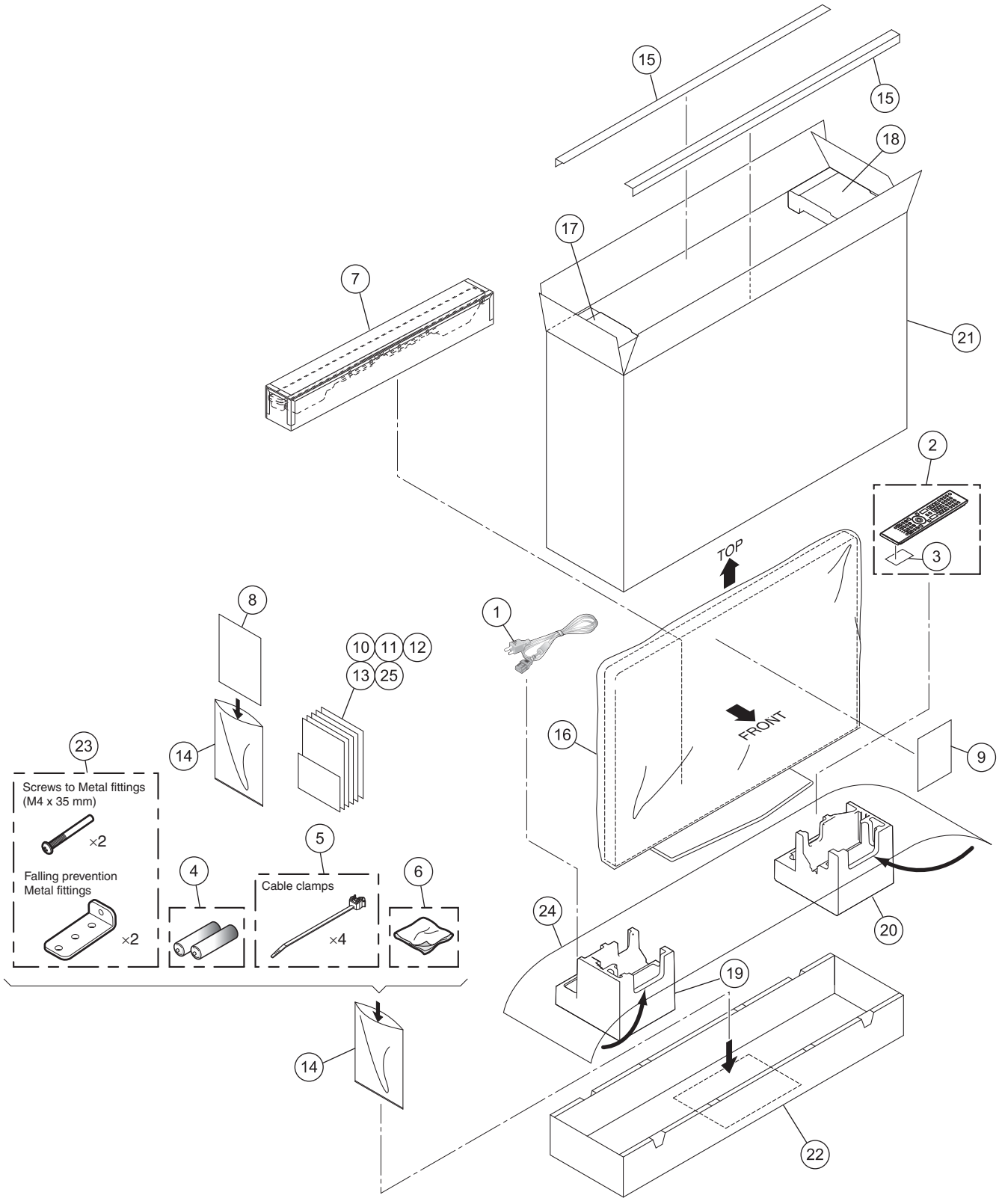

PACKING SECTION PARTS LIST

Mark	No.	Description	Part No.
⚠	1	Power Cord (2 m/6.6 feet)	ADG1215
	2	Remote Control	AXD1561
	3	Battery Cover (Black)	AZN2783
NSP	4	Alkaline Dry Cell Battery (LR6, AA)	VEM1023
	5	Binder Assy	AEC2158
	6	Cleaning Cloth	AED1285
	7	Speaker System	SMW2023
	8	Operating Instructions (English / French / Spanish)	ARE1488
	9	Caution Card	ARM1239
	10	Cleaning Caution (U)	ARM1303
	11	Power Button Caution	ARM1390
NSP	12	Card (Register)	ARY1215
NSP	13	Warranty Card KUC	ARY1196
	14	Polyethylene Bag	AHG1394
	15	Paper Angle (509U)	AHB1301
	16	Packing Sheet	AHG1405
	17	Pad (509 T-L U)	AHA2707
	18	Pad (509 T-R U)	AHA2708
	19	Pad (509 B-L REG)	AHA2709
	20	Pad (509 B-R REG)	AHA2710
	21	Upper Carton (5020FD)	AHD3657
	22	Under Carton (509U)	AHD3671
	23	Fall Prevention Steel Assy	AXY1218
	24	HD Sheet	AHG1416
	25	DIGITAL TV Trans Inf	ARM1399

9.2 REAR SECTION

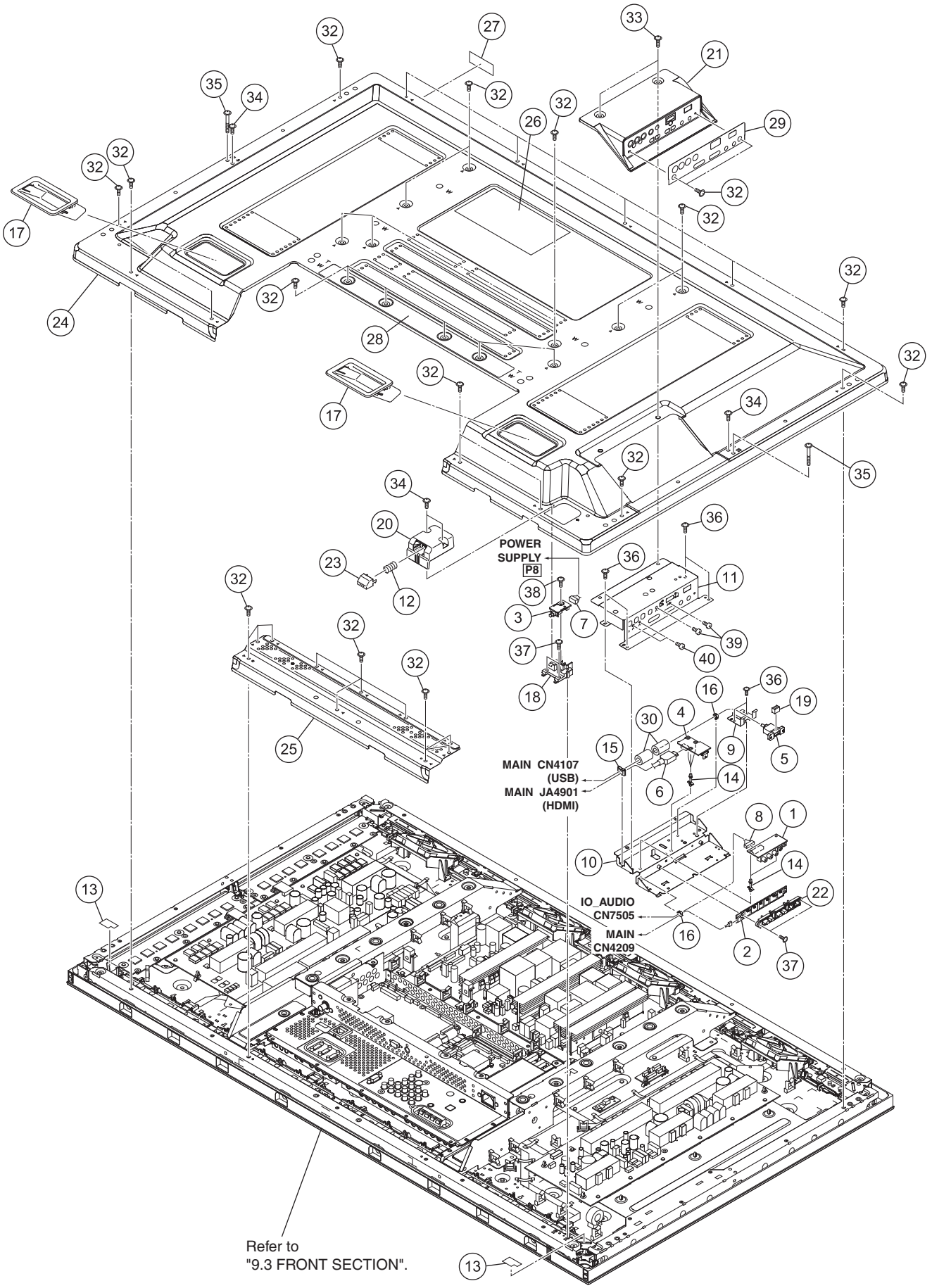

REAR SECTION PARTS LIST

Mark	No.	Description	Part No.
	1	SIDE IO Assy	AWW1356
	2	SIDE KEY Assy	AWW1361
	3	POWER SW Assy	AWW1366
	4	SIDE HDMI Assy	AWW1372
	5	USB Cable (J301)(120 cm)	ADF1034
	6	HDMI Cable (J302)(1150 mm)	ADF1037
	7	3P Housing Wire (J103)	ADX3630
	8	11P Housing Wire (J118)	ADX3644
	9	USB Holder	ANG3134
	10	Side Input Base	ANG3135
	11	Side Input Shield	ANG3136
	12	Coil Spring	ABH1125
	13	Sensor Cushion B (428)	AEB1486
NSP	14	PCB Spacer	AEC1084
	15	Edge Saddle	AEC1571
	16	Mini Clamp	AEC1971
	17	Inner Grip Assy	AMR3693
	18	Power Button Support	AMR3763
⚠	19	USB Gasket	ANK1962
	20	Power Button Case	AAK2927
	21	Side Input Cover	AMR3754
	22	Operation Button	AAC1569
	23	Power Button (508F)	AAD4152
	24	Rear Case (509)	ANE1671
	25	Under Cover (509)	ANE1672
NSP	26	Name Label (5020FD)	AAL3029
NSP	27	Serial Seal	AAX3182
	28	Label A (U)	AAX3566
	29	Side Label (U)	AAK2929
⚠	30	Ferrite Core (F15, F16)	ATX1069
	31	•••••	
	32	Screw (M3 x 6)	ABA1377
	33	Screw (M3 x 10)	ABA1378
	34	Screw (3 x 8 P)	ABA1379
	35	Screw (3 x 25 P)	ABA1380
	36	Screw	AMZ30P060FTB
	37	Screw	AMZ30P080FTB
	38	Screw	APZ30P080FTB
	39	Screw	BMZ30P080FTB
	40	Screw	BPZ30P080FTB

9.3 FRONT SECTION

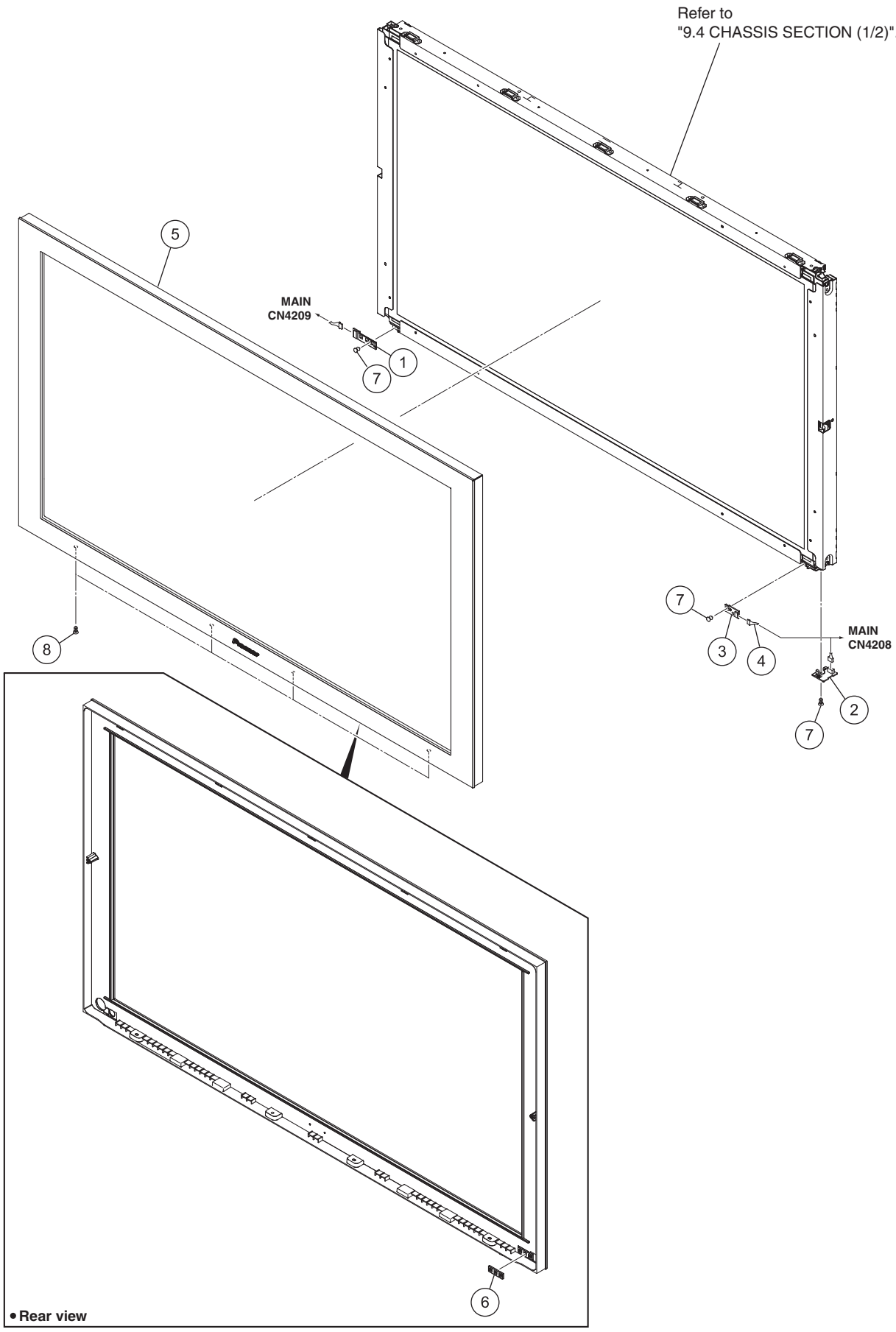

FRONT SECTION PARTS LIST

Mark No.	Description	Part No.
1	LED Assy	AWW1362
2	IR Assy	AWW1363
3	RLS Assy	AWW1365
4	7/3/3P Housing Wire (J117)	ADX3643
5	Front Bezel (509TVU)	AMB3099
6	Blind Cushion (508F)	AEB1479
7	Nylon Rivet	AEC1671
8	Rivet (Plastic)	AEC1877

9.4 CHASSIS SECTION (1/2)

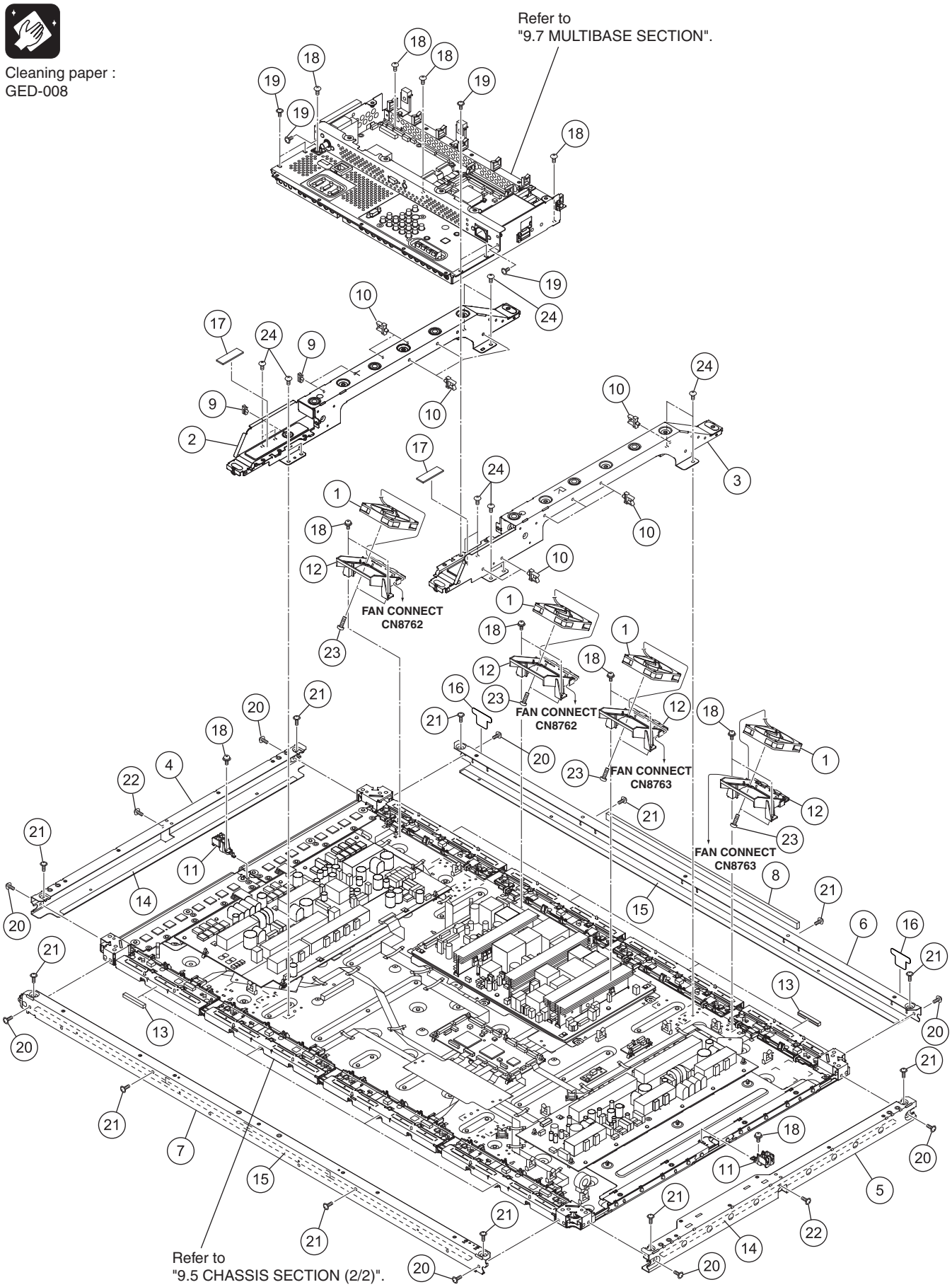

CHASSIS SECTION (1/2) PARTS LIST

Mark	No.	Description	Part No.
⚠	1	DC FAN Motor 80 x 15L	AXM1065
	2	Sub Frame L Assy (50)	ANA2137
	3	Sub Frame R Assy (50)	ANA2140
⚠	4	F. Chassis VL Assy 50	ANA2142
⚠	5	F. Chassis VR Assy 50	ANA2151
⚠	6	F. Chassis HT Assy 50	ANA2144
⚠	7	F. Chassis HB 50	ANA2188
	8	Waterproof Cushion	AEB1495
	9	Wire Clip	AEC1948
	10	Reuse Wire Saddle	AEC2134
	11	Support Bracket	AMR3762
	12	FAN Bracket 80	AMR3787
⚠	13	Gasket ADH-FCH	ANK1850
⚠	14	Front Gasket V50	ANK1963
⚠	15	Front Gasket H50	ANK1964
	16	FC Gate Sheet	AMR3906
	17	Stand Cushion	AED1340
	18	Screw	ABA1313
	19	Screw (M3 x 6)	ABA1377
	20	Screw	ABZ30P080FTC
	21	Screw	AMZ30P060FTB
	22	Screw	APZ30P080FTB
	23	Screw	PPZ50P100FTB
	24	Screw	TBZ40P060FTC

9.5 CHASSIS SECTION (2/2)

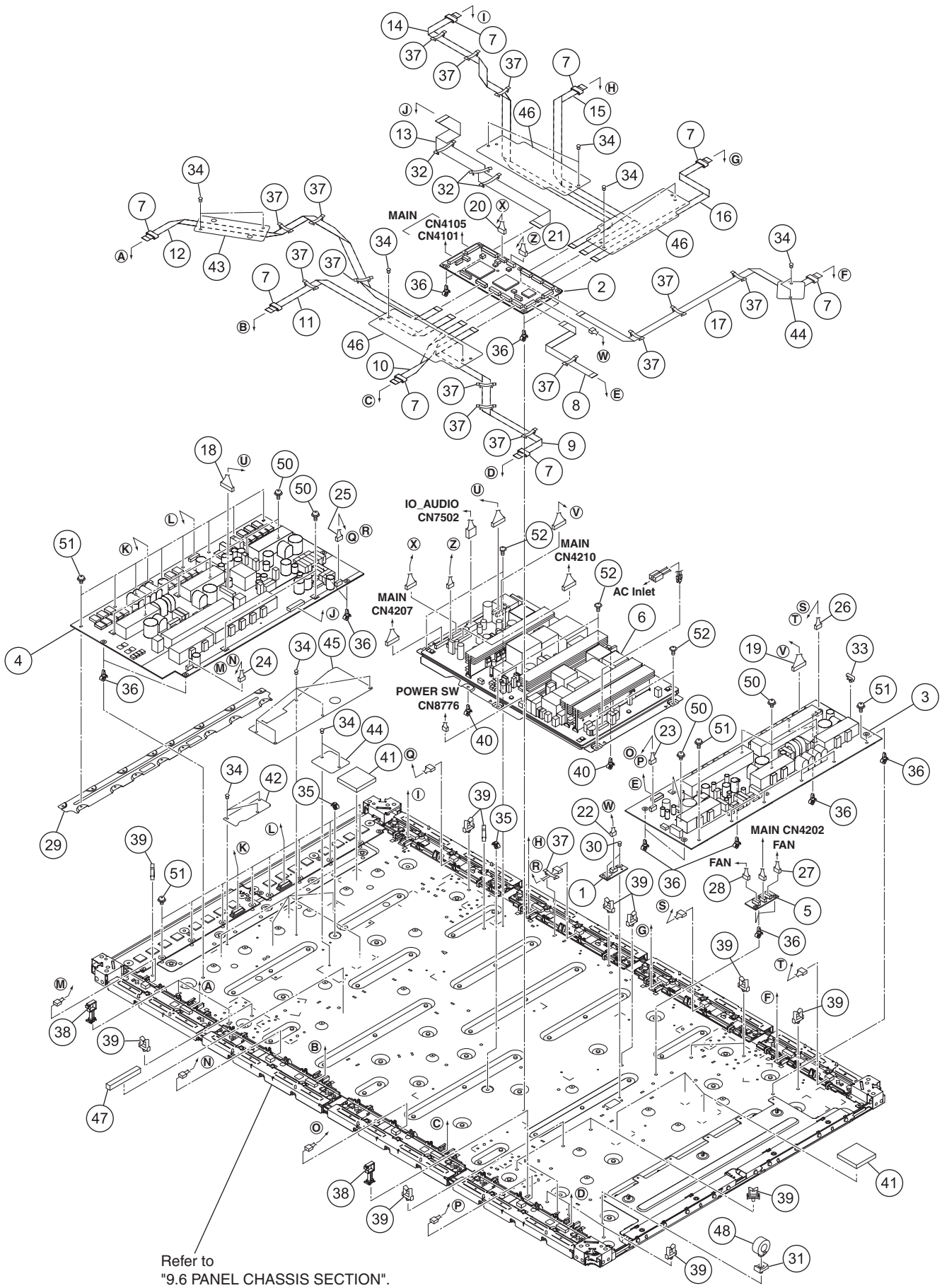

CHASSIS SECTION (2/2) PARTS LIST

Mark	No.	Description	Part No.
	1	SENSOR Assy	AWW1340
	2	50F DIGITAL Assy	AWW1347
	3	50F X DRIVE Assy	AWV2546
	4	50F Y DRIVE Assy	AWV2547
	5	FAN CONNECT Assy	AWW1364
⚠	6	POWER SUPPLY Unit	AXY1200
⚠	7	Ferrite Core (F1 - F8)	ATX1072
	8	Flexible Cable (J201)	ADD1540
	9	Flexible Cable (J202)	ADD1541
	10	Flexible Cable (J203)	ADD1542
	11	Flexible Cable (J204)	ADD1543
	12	Flexible Cable (J205)	ADD1544
	13	Flexible Cable (J206)	ADD1545
	14	Flexible Cable (J207)	ADD1546
	15	Flexible Cable (J208)	ADD1547
	16	Flexible Cable (J209)	ADD1548
	17	Flexible Cable (J210)	ADD1549
	18	12P/11P Housing Wire (J101)	ADX3628
	19	11P Housing Wire (J102)	ADX3629
	20	10P Housing Wire (J106)	ADX3632
	21	6P Housing Wire (J107)	ADX3633
	22	5P Housing Wire (J108)	ADX3634
	23	5/3/3P Housing Wire (J112)	ADX3638
	24	5/3/3P Housing Wire (J113)	ADX3639
	25	5/3/3P Housing Wire (J114)	ADX3640
	26	5/3/3P Housing Wire (J115)	ADX3641
	27	6/3/3P Housing Wire (J120)	ADX3646
	28	7/3/3P Housing Wire (J121)	ADX3647
	29	Plate Y (509)	ANG3127
	30	Nylon Rivet	AEC1671
	31	Ferrite Core Holder	AEC1818
	32	Flat Clamp	AEC1879
	33	Wire Clip	AEC1948
	34	Nylon Rivet	AEC2089
	35	Reuse Card Spacer	AEC2117
	36	PCB Spacer (Reuse)	AEC2122
	37	Flat Clamp	AEC2132
	38	Reuse Fastener	AEC2133
	39	Reuse Wire Saddle	AEC2134
	40	Reuse PCB Spacer 4.5	AEC2148
	41	Drive Sheet	AEH1155
	42	Y Drive Sheet B	AMR3769
	43	Y Drive Sheet C	AMR3783
	44	FAN Sheet	AMR3786
	45	Y Drive Sheet A (M)	AMR3881
	46	FFC Sheet	AMR3893
⚠	47	Gasket (10 x 10 x 80)	ANK1974
⚠	48	Ferrite Core (L1)	ATX1044
	49	•••••	
	50	Screw	ABA1313
	51	Screw	ABA1364
	52	Screw	ABZ30P060FTB

9.6 PANEL CHASSIS SECTION

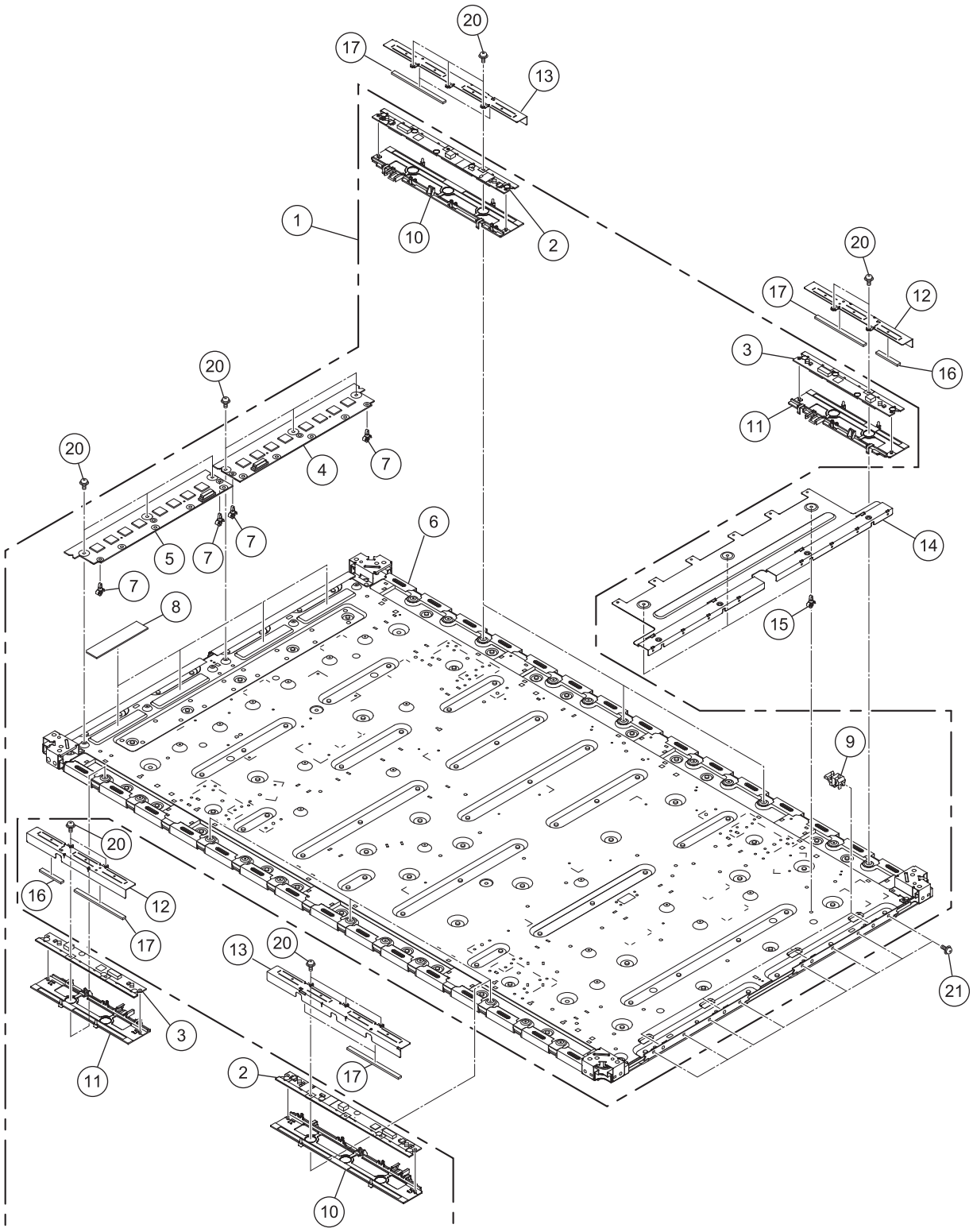

PANEL CHASSIS SECTION PARTS LIST

Mark	No.	Description	Part No.
NSP	1	P. Chassis (509F) Assy	AWU1293
NSP	2	50F ADDRESS L Assy	AWW1348
NSP	3	50F ADDRESS S Assy	AWW1349
NSP	4	50F SCAN A Assy	AWW1350
NSP	5	50F SCAN B Assy	AWW1351
NSP	6	P. Panel (50F) Assy	AWU1294
	7	Reuse PCB Spacer 4.5	AEC2148
	8	Heat Radiation Sheet	AEH1134
	9	Plate Holder	AMR3757
	10	Holder L Assy (509)	AMR3775
	11	Holder S Assy (509)	AMR3776
	12	Address Plate S (509)	ANG3129
	13	Address Plate L (509)	ANG3130
	14	Plate X (509)	ANG3128
	15	PCB Spacer (Reuse)	AEC2122
	16	Address Silicon TS	AEH1160
	17	Address Silicon TL	AEH1161
	18	•••••	
	19	•••••	
	20	Screw	ABA1351
	21	Screw	ABA1364

9.7 MULTIBASE SECTION

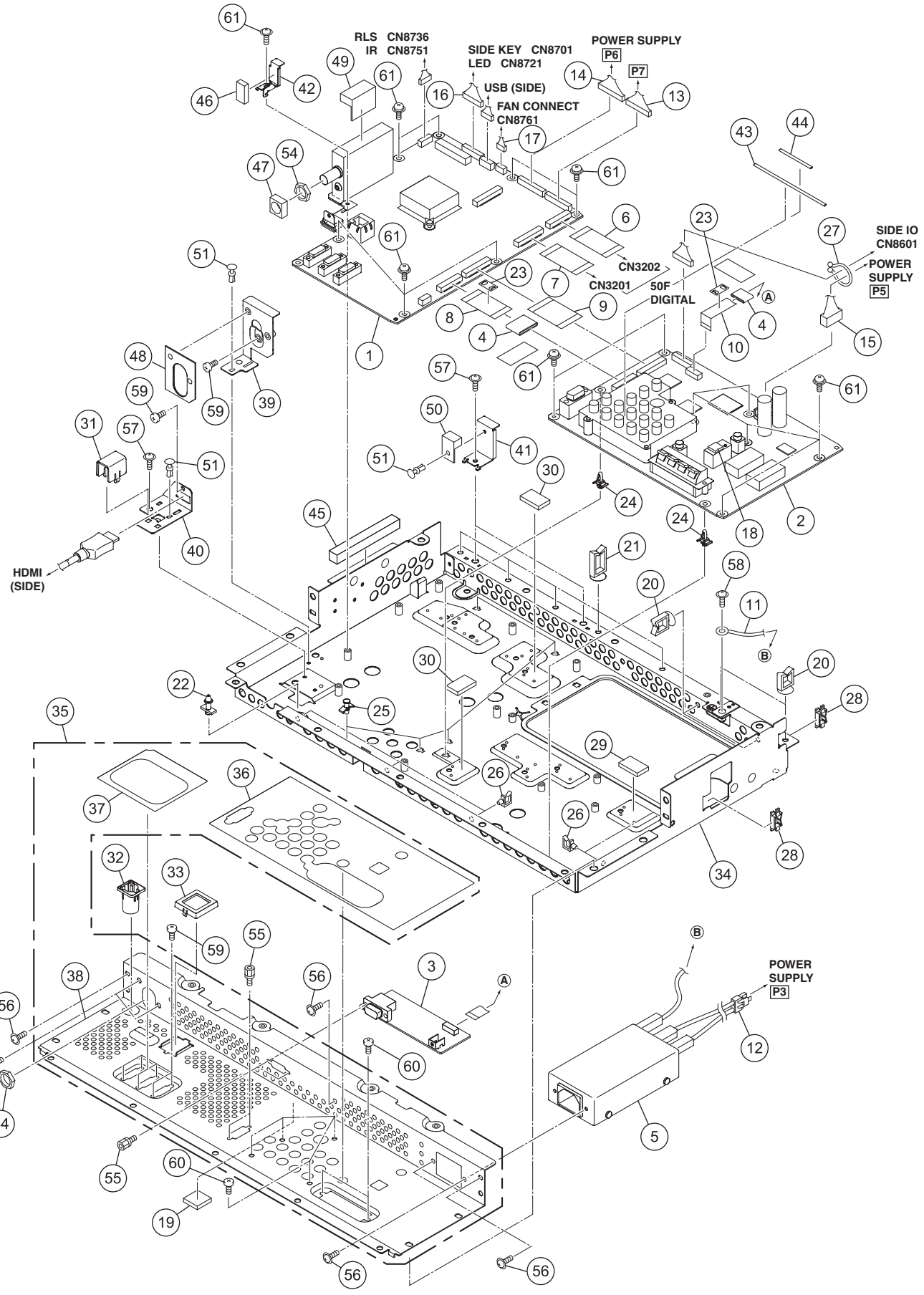

MULTIBASE SECTION PARTS LIST

Mark	No.	Description	Part No.
	1	MAIN Assy	AWW1371
	2	IO_AUDIO Assy	AWW1352
	3	PC Assy	AWW1359
⚠	4	Ferrite Core (F11, F12)	ATX1048
⚠	5	AC Inlet (CN1)	AKP1336
	6	Flexible Cable (J211)	ADD1533
	7	Flexible Cable (J212)	ADD1534
	8	Flexible Cable (J213)	ADD1535
	9	Flexible Cable (J214)	ADD1536
	10	Flexible Cable (J215)	ADD1537
⚠	11	Housing Wire (J105)	ADX3608
⚠	12	Housing Wire (J104)	ADX3631
	13	14P Housing Wire (J109)	ADX3635
	14	15P Housing Wire (J110)	ADX3636
	15	5P Housing Wire (J111)	ADX3637
	16	10/6/4P Housing Wire (J116)	ADX3642
	17	4P Housing Wire (J119)	ADX3645
	18	Rubber Sheet	AEB1498
	19	Cushion	AEB1499
	20	Wire Saddle	AEC1745
	21	Wire Saddle	AEC1797
	22	Circuit Board Spacer	AEC1872
	23	Ferrite Stopper	AEC1981
	24	Reuse PCB Spacer 4.5	AEC2136 or AEC2161
	25	PCB Spacer	AEC2146
	26	HDMI Clamp	AEC2147
	27	Clamp	AEC2156
	28	Edge Holder	AEC2159
	29	Silicon Sheet MTB A	AEH1174
	30	Silicon Sheet MTB B	AEH1175
	31	Cable Holder	AMR3770
	32	Sleeve	AMR3771
	33	Ether Cover	AMR3789
	34	MTB Assy	ANA2150
	35	1..T Panel U Assy	ANC2468
	36	2..Label B1 (U)	AAX3571
	37	2..Label B2 (U)	AAX3582
	38	2..Terminal Panel (U)	ANC2463
	39	Tuner Panel (U)	ANG3146
	40	HDMI Holder	ANG3147
	41	Earth BKT A	ANG3182
	42	Earth BKT C	ANG3184
	43	Gasket T	ANK1965
	44	Gasket 3 x 40	ANK1971
⚠	45	Gasket (10 x 10 x 80)	ANK1974
	46	Gasket (10 x 5 x 20)	ANK1976
⚠	47	Gasket (U)	ANK1977
	48	Gasket A	ANK1979
⚠	49	Gasket B	ANK1980
⚠	50	Gasket (10 x 8 x 15)	ANK1982
	51	Nylon Rivet	AEC1671
	52	•••••	
	53	•••••	
	54	Washer Faced Nut	BBN1005
	55	Hexagon Headed Screw	ABA1382
	56	Screw (M3 x 6)	ABA1377
	57	Screw	AMZ30P060FTB
	58	Screw	BMP40P080FSN
	59	Screw	BMZ30P060FTB
	60	Screw	BPZ30P080FTB
	61	Screw	PMB30P060FNI

9.8 PDP SERVICE ASSY

PDP SERVICE ASSY 509F : AWU1339

● **Exterior Section**

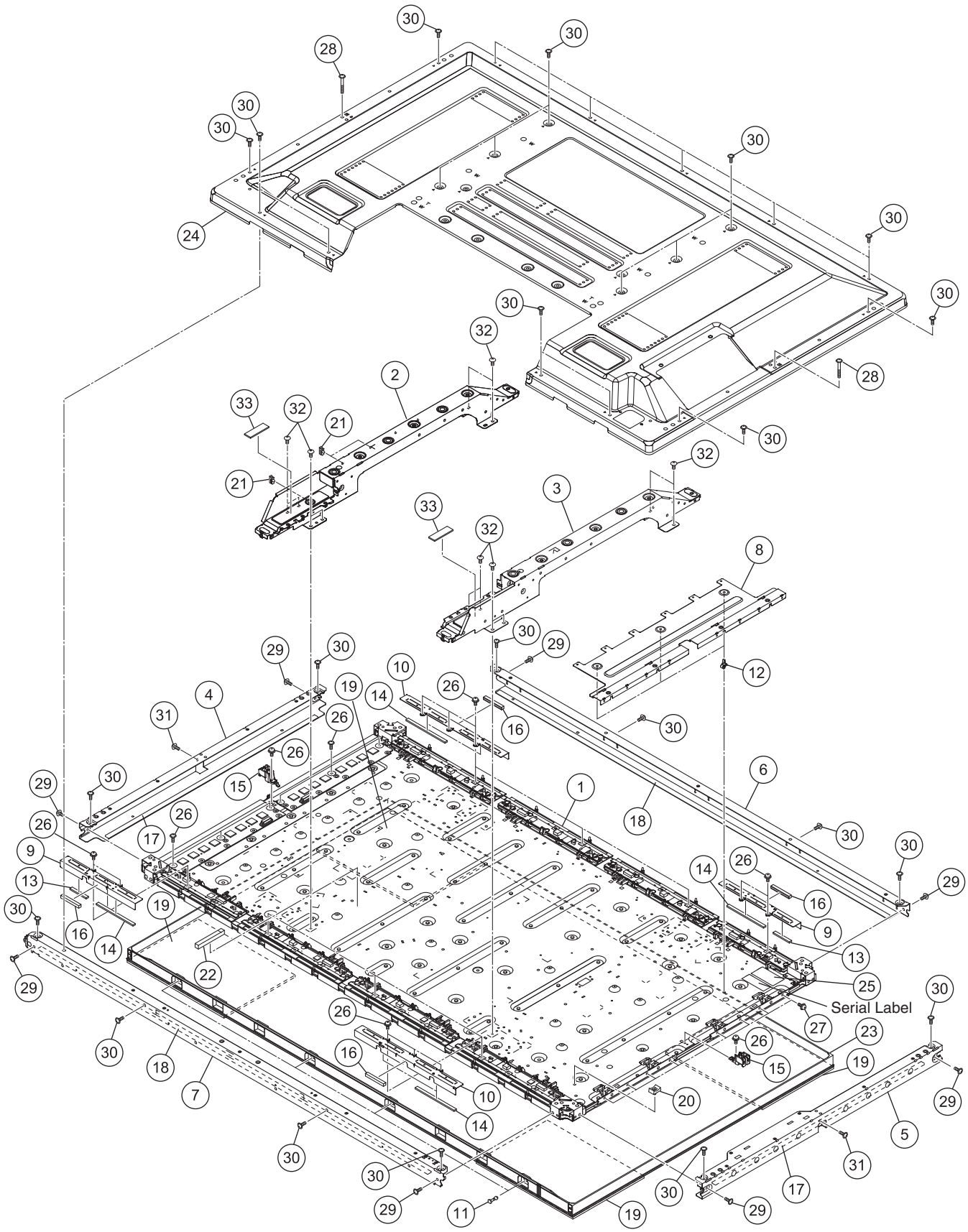

● Packing Section

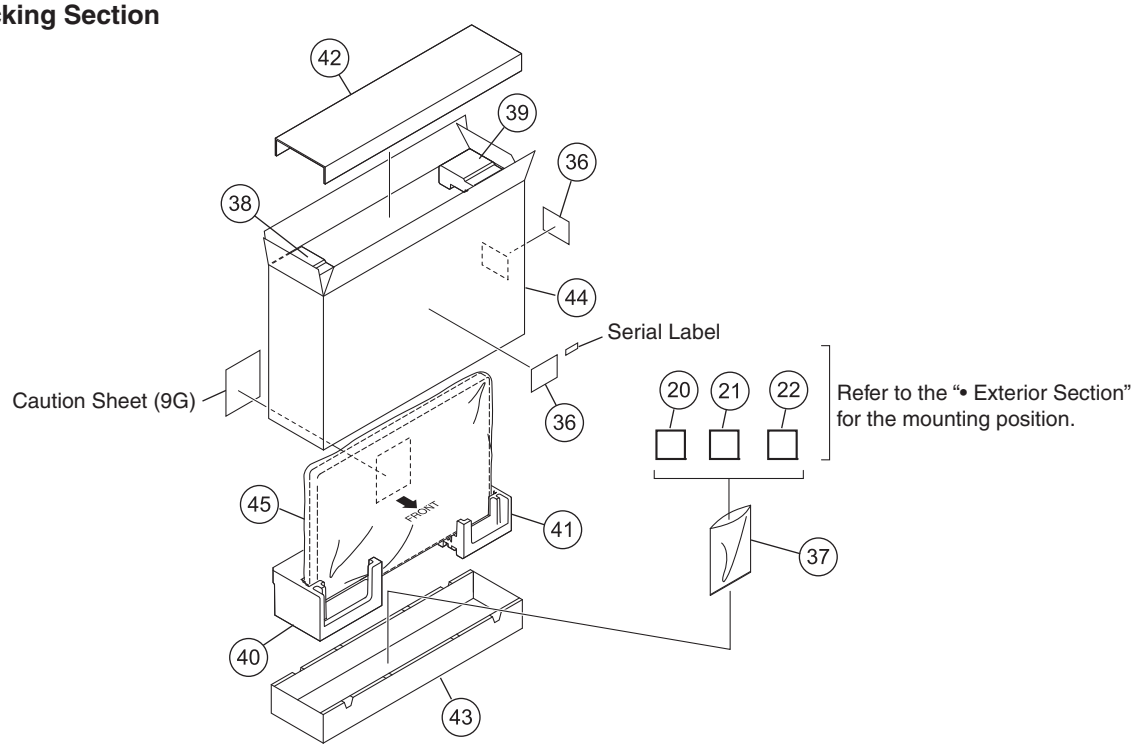

PDP SERVICE ASSY PARTS LIST

Mark	No.	Description	Part No.
NSP	1	P. Chassis (509F) Assy	AWU1293
	2	Sub Frame L Assy (50)	ANA2137
	3	Sub Frame R Assy (50)	ANA2140
⚠	4	F. Chassis VL Assy 50	ANA2142
⚠	5	F. Chassis VR Assy 50	ANA2151
⚠	6	F. Chassis HT Assy 50	ANA2144
⚠	7	F. Chassis HB 50	ANA2188
	8	Plate X (509)	ANG3128
	9	Address Plate S (509)	ANG3129
	10	Address Plate L (509)	ANG3130
	11	Rivet (Plastic)	AEC1877
	12	PCB Spacer (Reuse)	AEC2122
	13	Address Silicon TS	AEH1160
	14	Address Silicon TL	AEH1161
	15	Support Bracket	AMR3762
⚠	16	Gasket ADH-FCH	ANK1850
⚠	17	Front Gasket V50	ANK1963
⚠	18	Front Gasket H50	ANK1964
	19	Service Pad	AEC2105
	20	Ferrite Core Holder	AEC1818
	21	Wire Clip	AEC1948
⚠	22	Gasket (10 x 10 x 80)	ANK1974
NSP	23	Front Service Assy (509)	AMB3103
	24	Rear Case (509)	ANE1671
NSP	25	Drive Voltage Label	ARW1097

Mark	No.	Description	Part No.
	26	Screw	ABA1351
	27	Screw	ABA1364
	28	Screw (3 x 25 P)	ABA1380
	29	Screw	ABZ30P080FTC
	30	Screw	AMZ30P060FTB
	31	Screw	APZ30P080FTB
	32	Screw	TBZ40P060FTC
	33	Stand Cushion	AED1340
	34	•••••	
	35	•••••	
	36	Caution Label	AAX3031
	37	Vinyl Bag	AHG1338
	38	Pad (509 T-L EU)	AHA2727
	39	Pad (509 T-R EU)	AHA2728
	40	Pad (509 B-L EU)	AHA2729
	41	Pad (509 B-R EU)	AHA2730
	42	Carton Board (509)	AHB1303
	43	Under Carton (5090)	AHD3673
	44	Upper Carton (509F-SV)	AHD3716
	45	Protect Sheet	AHG1331

9.9 TABLE TOP STAND

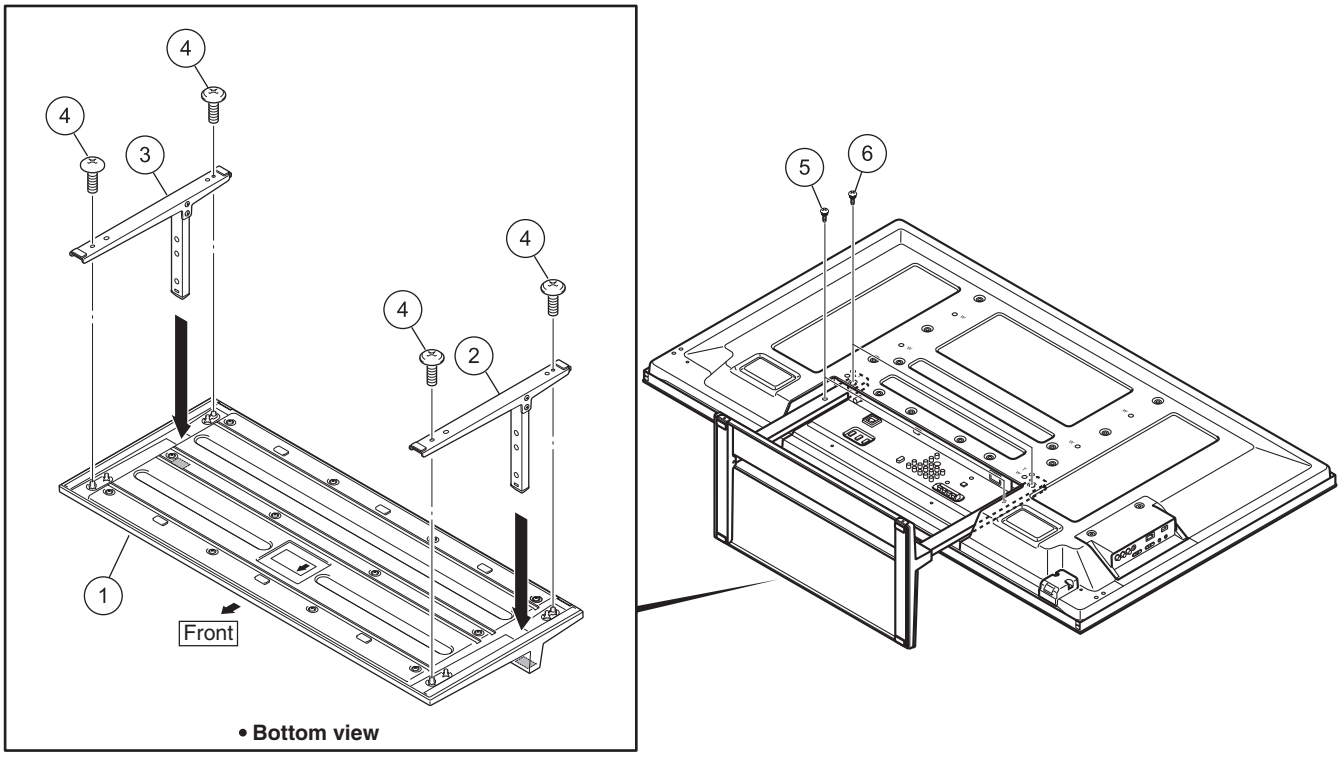

TABLE TOP STAND PARTS LIST

Mark	No.	Description	Part No.
	1	Base Cover	AXY1176
	2	Stand Pipe L	AXY1208
	3	Stand Pipe R	AXY1209
	4	Screw	ABA1357
	5	Screw (M8 x 23)	ABA1371
	6	Screw (M8 x 40)	ABA1373

9.10 SPEAKER SYSTEM (PACKING)

SPEAKER SYSTEM : SMW2023

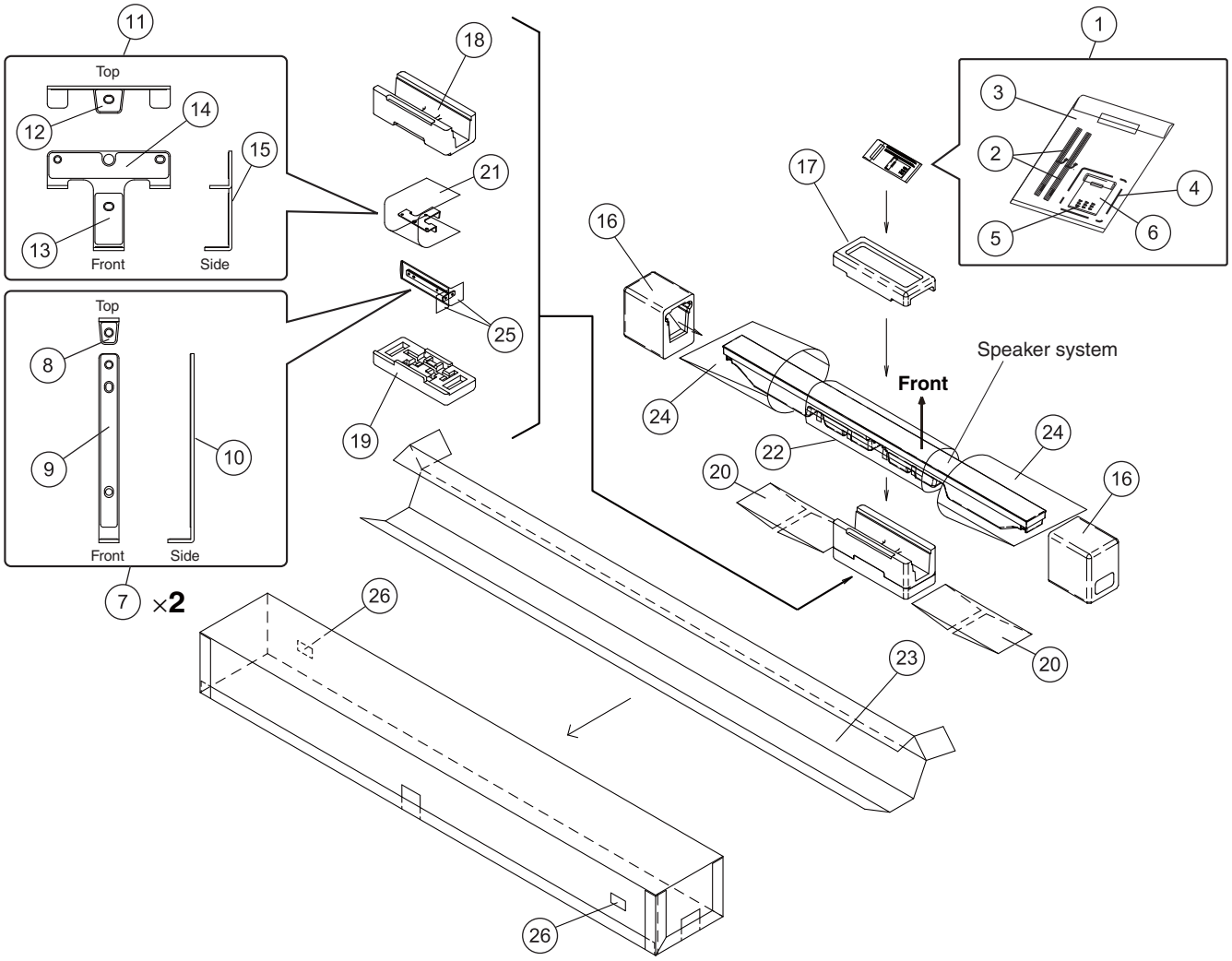

SPEAKER SYSTEM (PACKING) PARTS LIST

Mark	No.	Description	Part No.
NSP	1	1..Accessory Set	SME3854
	2	2..Speaker Cable	SDS1202
	3	2..Polyethylene Bag S1	SHL1439
NSP	4	2..Screw Set	SME3853
	5	3..Speaker Mounting Screw	SBA1292
	6	3..Polyethylene Bag S0	SHL1438
	7	1..Speaker Bracket (Side)	SXG1158
	8	2..Gasket	SED1182
	9	2..Gasket	SED1183
NSP	10	2..Bracket S	SNA1493
	11	1..Speaker Bracket (Center)	SXG1159
	12	2..Gasket	SED1184
	13	2..Gasket	SED1185
	14	2..Gasket	SED1186
NSP	15	2..Bracket C	SNA1494
	16	Protector (SIDE)	SHA2602
	17	Protector (C-T)	SHA2603
	18	Protector (C-M)	SHA2604
	19	Protector (C-B)	SHA2605
NSP	20	Inner Carton Board	SHB1192
	21	Protection Sheet S1	SHC1869
	22	Protection Sheet S3	SHC1875
	23	Packing Case	SHG2816
	24	Packing Bag S2	SHL1450
	25	Polyethylen Bag S0	SHL1451
NSP	26	Label Serial	SRW1112

9.11 SPEAKER SYSTEM

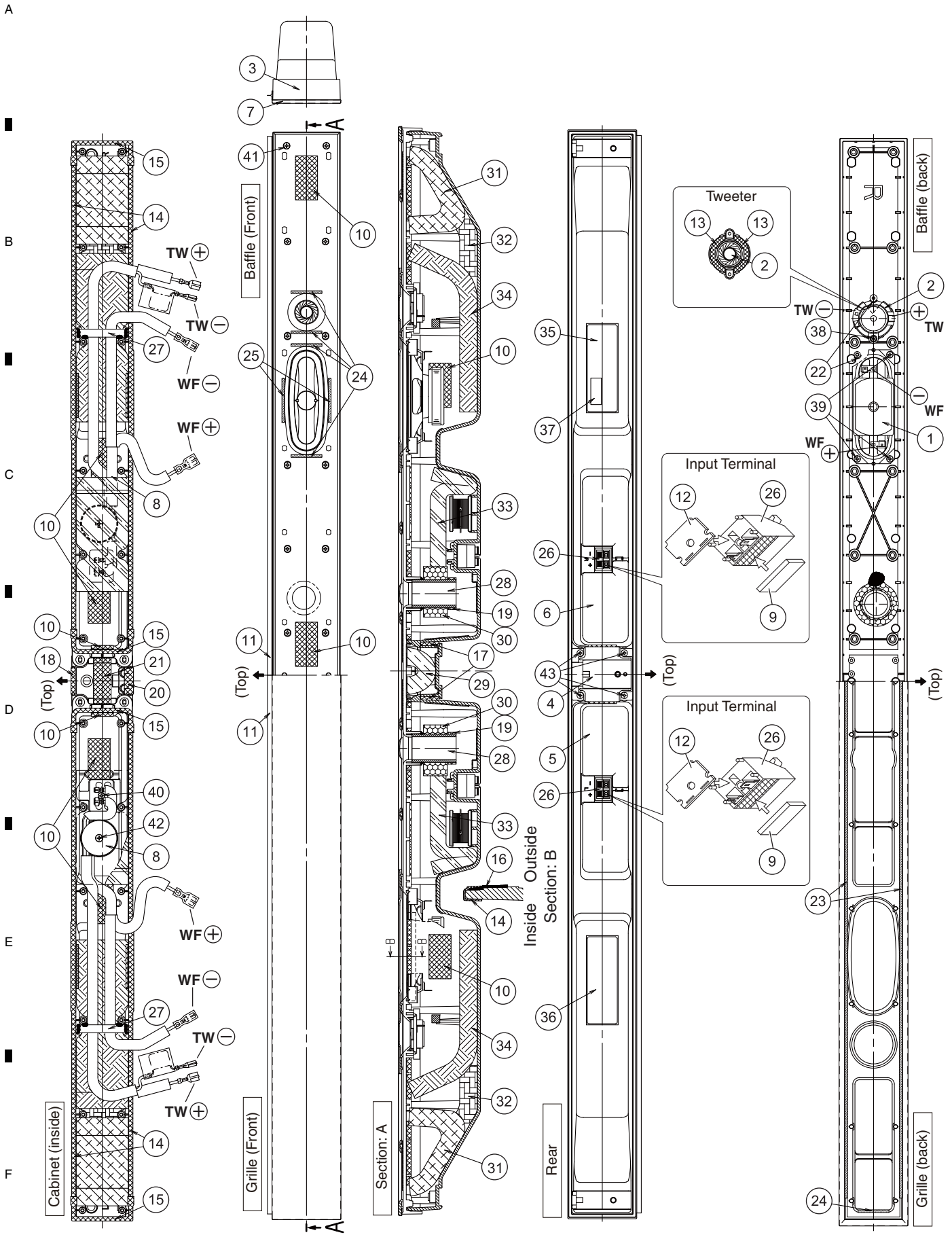

BAFFLE

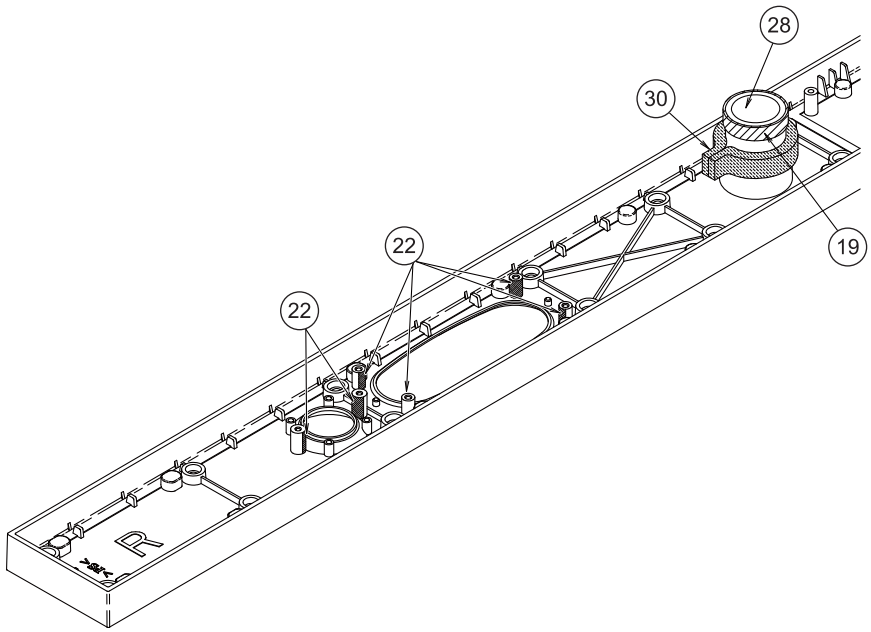

CS ASSY PARTS LIST

Mark	No.	Description	Part No.
	1	Speaker	H132DC65-53D
	2	Speaker	FK26AP32-58H
NSP	3	Baffle	SNK3032
NSP	4	Cabinet Assy C	SXG1155
NSP	5	Cabinet Assy L	SXG1156
NSP	6	Cabinet Assy R	SXG1157
	7	Grille	SMG1894
	8	1..Network Ass'y	SWN1792
		2..Capacitor 1.5	SCE1034
		2..Choke Coil 0.47	STH1269
NSP	9	Gasket	SEB1299
NSP	10	Gasket	SEB1300
NSP	11	Blinder	SEB1304
NSP	12	Gasket	SEC2074
	13	Gasket	SEC2083
NSP	14	Gasket	SEC2197
NSP	15	Gasket	SEC2201
NSP	16	Gasket	SEC2203
NSP	17	Gasket	SEC2204
NSP	18	Gasket	SEC2205
NSP	19	Gasket	SEC2229
NSP	20	Gasket	SEC2235
NSP	21	Felt	SED1127
NSP	22	Felt	SED1130
	23	Tape	SEH1089
	24	Tape	SEH1099
	25	Tape	SEH1115
	26	Input Terminal	SKX1098
NSP	27	MDF Bar	SLX1176
NSP	28	Paper Tube 26	SMR1403
NSP	29	Acoustic Absorbent	SMT1328
NSP	30	Acoustic Absorbent	SMT1331
NSP	31	Acoustic Absorbent	SMT1333
NSP	32	Acoustic Absorbent	SMT1335
NSP	33	Acoustic Absorbent	SMT1357
NSP	34	Acoustic Absorbent	SMT1359
NSP	35	Model Label	SAN4025
NSP	36	Caution Label	SRR1032
NSP	37	Label Serial	SRW1111
	38	Screw	BPZ30P080FTC
	39	Screw	BPZ35P080FTC
	40	Screw	BPZ35P120FTC
	41	Screw	BPZ35P140FTB
	42	Screw	BPZ40P350FTC
	43	Screw	SBA1291